Centrometal

HEATING TECHNIQUE

PRODUCT CATALOGUE








EKO CKP 20
EKO CKP 20
KO CKP 20


EKO CKP 20

Dear colleagues, dear present and future users of our products,

quality product, efficient use of energy, environmental protection and, above all, a satisfied customer are the basic guidelines of Centrometal today. This philosophy is present from the development, production, use and maintenance of Centrometal products, to the training of employees and associates of the company.

If we could by any chance turn back into the past, in front of us we could see **a sixty-years old tradition of building hot water boilers**, with almost the same long tradition of the rest of the production program. At the very beginning of 1965, Mr. Karlo Zidarić opened a craft workshop for the installation and maintenance of central heating systems. With this experience, we stepped into the world of development and design, which we implemented in 1990 in the newly established company Centrometal d.o.o.

The traditional diligence of the people from Međimurje county, comprehensive cooperation with scientific institutions, especially the Faculty of Mechanical Engineering and Naval Architecture in Zagreb, have resulted in a significant expansion of the company, which today employs 270 employees, **has its own development based on domestic know-how, training center, test center, modern technology park and extensive service in country and abroad.**

The quality of the company's products and management of the company is guaranteed and ensured by the introduced ISO 9001 quality assurance system and ISO 14001 environmental management system. The presence on many European markets is ensured by certificates of conformity issued by authorized domestic and international institutions.

Today, Centrometal d.o.o. operates in the markets of 40 European countries, and in seven of them has organized its own service network, which confirms not only the quality of our products but also customer care.

We are happy that some of our products will bring warmth to your home.

Davor Zidarić



PRODUCTION

Production in the company Centrometal d.o.o. takes place on modern machines and devices, thus ensuring quality and traceability.

The production of stainless steel equipment is separated from other production, to meet the requirements of this technology.

With the introduction of Industry 4.0 and the constant modernization of the machine park, we increase production capacities, facilitate work and ensure the continuity of the quality of our products, all in order to satisfy our customers.







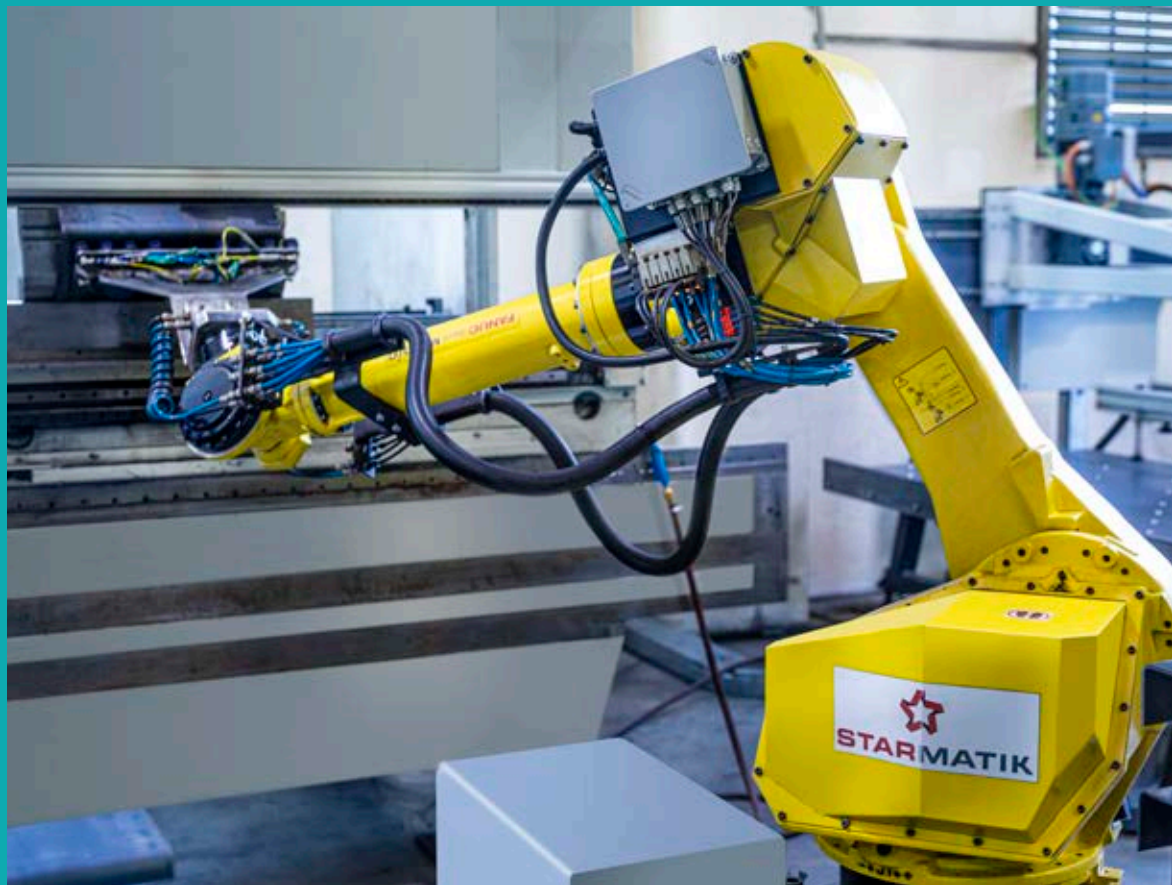

ASSEMBLY AND STORAGE

Great attention is paid to the assembly and final inspection of each product.

The recently expanded storage space allows us even more flexibility in production so that the final product arrives on time to its customer.

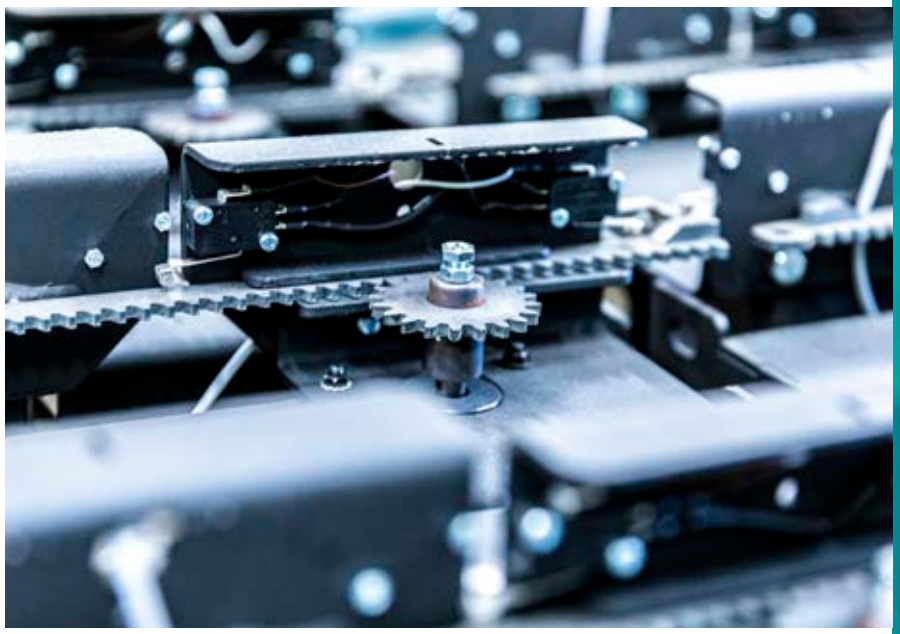





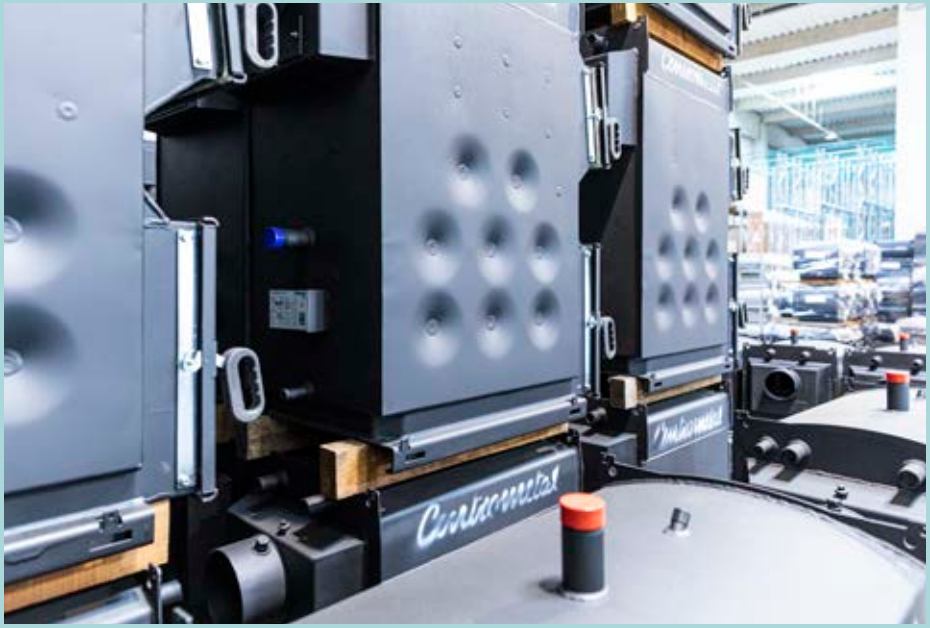



RESEARCH ANDI DEVELOPMENT

Centrometal products are tested and certified according to the requirements of Croatian and European norms and directives and relevant legal regulations, both for the territory of Croatia and for the countries to which we export our products.

We carry out development and tests in the production process in our own test center, according to the procedures defined by our quality system, and we entrust type and finished product tests to independent test laboratories in the country and abroad.

All our products pass the testing process and have the appropriate certificates and markings necessary for putting the product on the market, guaranteeing their quality and safe operation.



SVEUČILIŠTE U ZAGREBU
FAKULTET STROJARSTVA I BRODOGRADNJE
Laboratorij za toplinu i toplinske uređaje
I. Lučića 5, 10000 Zagreb Tel.: (01) 616 8222, Fax.: (01) 615 6940
www.fsb.hr/termolab e-mail: termolab@fsb.hr

STROJÍRENSKÝ ZKUŠEBNÍ ÚSTAV, s. p.
(ENGINEERING TEST INSTITUTE, Public Enterprise)
Hudcova 56b, 621 00 Brno, Czech Republic

KONČAR
INSTITUT
za elektrotehniku

TGM
Versuchanstalt

SIQ
Slovenski institut za kakovost in meroslovje
Slovenian Institute of Quality and Metrology

TÜV NORD

Technigas

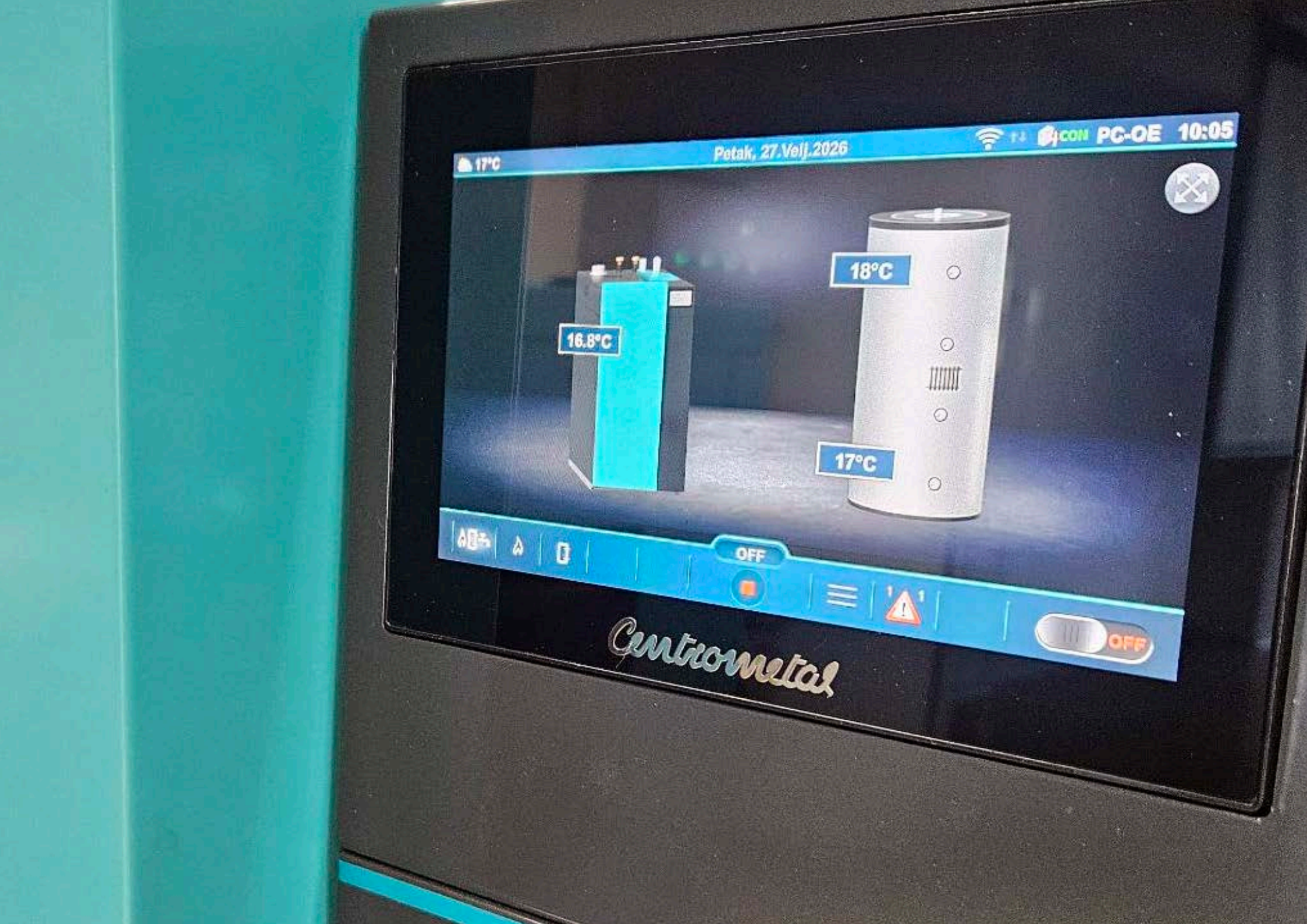
17°C
Petak, 27.Velj.2026
PC-OE
10:05
16.8°C
18°C
17°C
OFF
OFF
Centrometal

CERTIFICATES



Certificate

Management system as per
ISO 9001:2015

The Certification Body TÜV NORD CERT GmbH hereby confirms as a result of the audit, assessment and certification decision according to ISO/IEC 17021-1:2015, that the organization

Centrometal d.o.o.
Glavna 12
40 306 Macinec
Croatia

operates a management system in accordance with the requirements of ISO 9001:2015 and will be assessed for conformity within the 3 year term of validity of the certificate.

Scope

Development and production of equipment and accessories for heatin
preparation of domestic water: hot water boilers and electric boilers,
domestic hot water heaters, water accumulation tanks in the heating
hydrophore pressure vessels.

Certificate Registration No. 44 100 087121
Audit Report No. 10025825

Valid from 2026-01-07
Valid until 2026-11-26
Initial certification 2008

Zagreb, 2026-01-07

Certification body at TÜV NORD CERT GmbH

TÜV NORD CERT GmbH
Am TÜV 1, 45307 Essen
www.tuev-nord-cert.com

TÜV®

Certificate

ISO 14001

Management system as per
ISO 14001:2015

The Certification Body TÜV NORD CERT GmbH hereby confirms as a result of the audit, assessment and certification decision according to ISO/IEC 17021-1:2015, that the organization

Centrometal d.o.o.
Glavna 12
40 306 Macinec
Croatia

operates a management system in accordance with the requirements of ISO 14001:2015 and will be assessed for conformity within the 3 year term of validity of the certificate.

Scope

Development and production of equipment and accessories for heating, cooling and preparation of domestic water: hot water boilers and electric boilers, heat pumps, domestic hot water heaters, water accumulation tanks in the heating system and hydrophore pressure vessels.

Certificate Registration No. 44 104 087121
Audit Report No. 10425875

Valid from 2026-01-15
Valid until 2029-01-14
Initial certification 2014

Zagreb, 2026-01-07

Certification body at TÜV NORD CERT GmbH

TÜV NORD CERT GmbH
Am TÜV 1, 45307 Essen
www.tuev-nord-cert.com

TÜV®

WE OWN THEI
FOLLOWING MARKINGS

CE

AAA®
BONITETNA IZVRSNOST

GOST-R

MCS

DIN Geprüft



CONTENT



CENTRAL HEATING COOKERS WITHOUT OVEN	**BIO-CET B**	18-30 kW	14
CENTRAL HEATING COOKERS WITH OVEN	**BIO-PEK-B**	18-30 kW	18
COMBINED HOT WATER BOILER	**EKO-CK P**	14-110 kW	22
COMBINED HOT WATER BOILER WITH DHW TANK	**EKO-CKB P**	20-50 kW	26
HOT WATER SOLID FUEL BOILER	**EKO-CKS**	150-380 kW	30
	EKO-CKS 500	500 kW	34
CYCLONE CC WITH FAN AND CONTROLLER	**CYCLONE CC**	250-380 kW	38
OPEN EXPANSION VESSEL	**OPC**		40
TWO COMBUSTION CHAMBER BOILERS / AND WITH DHW TANK	**CentroPlus / CentroPlus-B**	25-49 kW	42
WOOD GASIFICATION BOILER	**BioTec II**	25-45 kW	48
TWO COMBUSTION CHAMBER BOILERS WITH LAMBDA PROBE	**BioTec Plus**	25-45 kW	52
BOILER RETURN FLOW PROTECTION	**VTC**		56
	LTC		58
PELLET STOVES (AIR HEATING)	**CentroPelet Z6N / A10 / ZR12**	6,2-9,05 kW	60
	CentroPelet ZS	9,01 kW	64
PELLET STOVES (AIR AND CENTRAL HEATING)	**CentroPelet ZV**	17,1-30,48 kW	68
COMPACT HOT WATER PELLET BOILERS	**CentroPelet ZVB**	14,4-29,14 kW	72
	ZVB II	13,8-21,2 kW	76
	CentroPelet ZVBS	25-35 kW	80
PELLET BOILER	**PelTec-Compact**	12-24 kW	84
	PelTec II Lambda 12-48	12-48 kW	88
	PelTec II Lambda 69/96	69/96 kW	92
PELLET HEATING EQUIPMENT	**Cm Pelet-set Touch**		96
PELLET BOILERS HIGHER POWER	**EKO-CKS P Unit**	140-560 kW	100
EQUIPMENT FOR PELLET SYSTEMS	**PELLET TANKS**		104
	VAKUUM SUCTION SYSTEM		106
	PELLET SUPPLY		108
WOOD CHIP BOILER	**BIO-SC**	48-96 kW	112
WOOD CHIP AND PELLET BOILER	**EKO-CKS Multi Plus**	170-580 kW	116
EQUIPMENT FOR WOOD CHIP / PELLET SYSTEMS	**WOOD CHIP CONTAINERS**		120



BUFFER TANKS FOR CENTRAL HEATING SYSTEMS	CAS	300-5.000 lit.	122
BUFFER TANKS FOR COLD AND HOT WATER	CAS to order	do 250.000 lit.	126
	CAS-HV and CAS HV 50/100	50-5.000 lit.	128
	PSS	50-500 lit.	130
GAS CONDENSING COMBI BOILER	GasTec	20-35 kW	132
OIL/GAS HOT WATER BOILERS	EKO-CUP M3 /EKO-CUP M3 Bg	18-80 kW	134
	EKO-CUP S3 / EKO-CUP SU3	125-600 kW	138
	EKO-CUP V3 / EKO-CUP SV3	0.8-2.1 MW	142
BOILER CONTROLLER OIL/GAS	CUPREG-Touch		146
ROOM CORRECTOR	CKS-Touch		148
ADDITIONAL EQUIPMENT	ADDITIONAL EQUIPMENT FOR Touch CONTROLLER		150
FLUE GAS TUBES AND ELBOWS	FLUE ELBOWS AND TUBES		152
ELECTRIC BOILERS	El-Cm Basic / Classic / ePlus		154
	eCompact Uz / El-Cm Professional		158
CONTAINER BOILER ROOMS	CONTAINER BOILER ROOMS	12-2.100 kW	160
COMBINED STAINLESS STEEL DOMESTIC HOT WATER TANKS	SKB-Digi / LKB-Digi	80-120 lit.	164
STAINLESS STEEL DOMESTIC HOT WATER TANKS	TB	120-850 lit.	168
ENAMELLED DOMESTIC HOT WATER TANKS	BW	200-1.000 lit.	172
	WW	1.500-2.000 lit.	174
SOLAR STAINLESS STEEL DOMESTIC HOT WATER TANKS	STB	200-850 lit.	176
SOLAR ENAMELLED DOMESTIC HOT WATER TANKS	BE	200-1.000 lit.	180
	EP	1.500-2.000 lit.	182
ENAMELLED DOMESTIC HOT WATER TANKS FOR HEAT PUMPS	WWM	200-2.000 lit.	184
SOLAR ENAMELLED DOMESTIC HOT WATER TANKS FOR HEAT PUMPS	EPM	300-2.000 lit.	186
FLAT PLATE SOLAR THERMAL COLLECTOR	CPK-8203N 4H		188
SOLAR PUMP GROUP	CSPG TL-6600		192
SOLAR CONTROLLER	Cm-SOL		194
HEAT PUMP	HEAT PUMP	5-40 kW	196
INDOOR UNIT OF HEAT PUMPS	Tower-S/210 / Tower-M/210		204
WATER PRESSURE TANK	HYDROPHORES VESSELS CH	90-300 lit.	208

BIO-CET B

Hot water central heating cooker without oven for solid fuel firing

Steel hot water central heating cooker without oven **BIO-CET B** are engineered for firing with solid fuel and are intended for central heating of the building and cooking of food.

The heat output delivered to the heating water is 12, 19 and 25 kW, while the surrounding area is delivered 5 to 6 kW via the upper heating plate. These cookers can be used for heating more than one floor if the heat demand is in accordance with their nominal performance.

They can be installed on closed and open central heating systems, with and without buffer tank. By changing the position of the grate, the firebox simply adapts to the needs of space heating.

Modern design and dimensions that fit into the standard dimensions of kitchen elements make their installation acceptable in the kitchen, but also in another part of the house or apartment, where there is a connection to the chimney.

They are made in accordance with EN 12815, ISO 9001 and ISO 14001.



CHOPPED WOOD, UP TO 0,33 m



WOOD BRIQUETTES



Characteristics of BIO-CET B cookers

- Hot water cookers for central heating and cooking, designed for heating with solid fuel.
- Part of the heat is transferred to the surrounding space through the upper heating plate.
- Properly dimensioned firebox and multiple passages for heat exchange ensures a high degree of efficiency of the cooker and allows food to be cooked on the upper heating plate.
- The possibility of changing the position of the firebox grate using the built-in mechanism allows cooking throughout the year.
- A thermal protection heat exchanger with connection for a thermal valve is installed at the factory, which enables the installation of cookers in closed central heating systems.
- The large door and the firebox of the cooker enable heating with large solid fuel (length up to 33 cm) and easy cleaning and maintenance.
- They are economical and environmentally friendly.
- The basic delivery of the cooker includes a draft regulator and a thermomanometer.
- The circulation pump of the central heating system is controlled by a factory-installed thermostat..
- The installation of the CAS /-B /-S /-BS buffer tank enables easy cooking throughout the year.



Cooker cross section



Stainless steel heating plate frame



Three possible chimney connections



Boiler door, thermomanometer, draft regulator



Heating system connections, thermal protection connections





Version

Cooker BIO-CET B 23 and 29

They are made in two versions:

- BIO-CET B – D boiler made in the right version (chimney connection the right side)
- BIO-CET B – L boiler made in the left version (chimney connection on the left side)

Cooker BIO-CET B 17

The cookers are connected to the chimney from the top to the flue connection.

Cookers can be connected to the chimney from the rear, from a side or upper right side of the cooker - **right version**, or from the rear, from a side or upper left side of the cooker - **left version**.

Delivery and obligatory additional equipment



Delivery:

- Cooker with casing, built-in thermomanometer, draft regulator, pump thermostat and cleaning accessories, grate lifting lever, on a wooden pallet

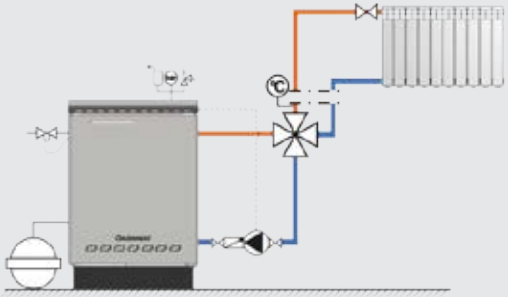

Directly to the heating system

- Manual 4-way mixing valve

Closed heating system

- Thermal valve, safety airvent group (2.5 bar) and expansion vessel

Open heating system

- Open expansion vessel

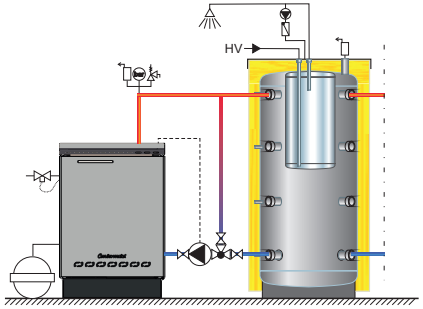

With CAS buffer tank

- Buffer tank CAS /-B /-S /-BS, 3-way thermostatic valve LTC, VTC... (60° C)

Closed heating system

- Thermal valve, safety airvent group (2.5 bar) and expansion vessel

Open heating system

- Open expansion vessel

Basic dimensions

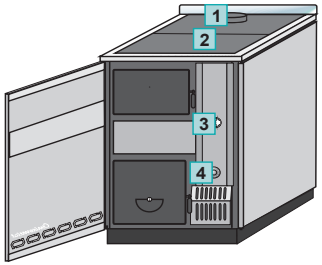

BIO-CET B 17

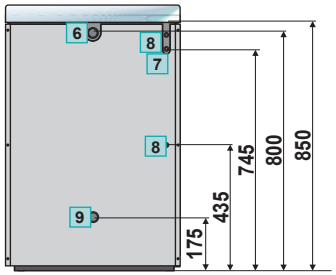

BIO-CET B 17

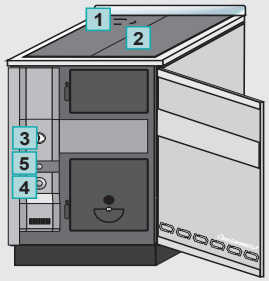

BIO-CET B 23/29
(made in **left** version)

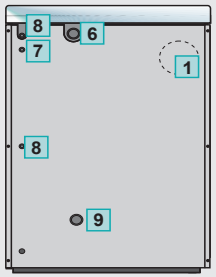

BIO-CET B 23/29
(made in **left** version)

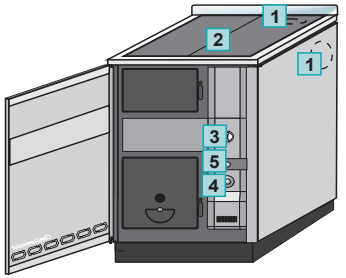

BIO-CET B 23/29
(made **right** version)

BIO-CET B		BIO-CET B 17	BIO-CET B 23	BIO-CET B 29
Rated heat output	(kW)	18	24	30
Heat output on the water side	(kW)	12	19	25
Heat output on the surrounding area	(kW)	6	4	5
Cooker water content	(lit.)	29	33	40
Flue gas tube diameter*	Ø (mm)	118	150	150
Chimney underpressure	(Pa)	10	13	15
Boiler depth	(mm)	635	635	635
Boiler height	(mm)	460	600	715
Boiler height	(mm)	910	885	885
Upper boiler door opening	(mm)	240x150	240x150	150x240
Lower boiler door opening	(mm)	275x205	270x250	250x270
Main flow	(R)	1"	5/4"	5/4"
Return flow	(R)	1"	5/4"	5/4"
Maximum operating temperature	(°C)	90	90	90
Maximum operating overpressure	(bar)	2,5	2,5	2,5
Cooker mass	(kg)	121	176	201
Energy efficiency class		A	A	A

* The inner diameter of the chimney is determined according to the power of the cooker and the height of the chimney and must almost always be larger than the diameter of the flue gas tube

BIO-CET B 23/29
(made **right** version)

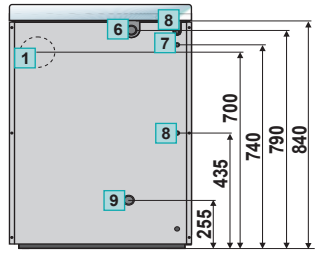

1	Flue gas tube opening
2	Heating plate
3	Thermomanometer
4	Draft regulator
5	Cleaning opening
6	Cooker main flow
7	Connection for temperature sensors of thermal valve
8	Heat exchanger connection
9	Cooker return flow

BIO-PEK B

Hot water central heating cooker with oven for solid fuel firing

Steel hot water central heating cooker with oven **BIO-PEK B** are engineered for firing with solid fuel and are intended for central heating of the building and food preparation by cooking and baking.

The heat output delivered to the heating water is 12, 19 and 25 kW, while the surrounding area is delivered 5 to 6 kW via the upper heating plate. It is possible to choose between cookers with left or right chimney connection. These cookers can be used for heating more than one floor if the heat demand is in accordance with their nominal performance.

They can be installed on closed and open central heating systems, with and without buffer tank. By changing the position of the grate, the firebox simply adapts to the needs of space heating.

Modern design and dimensions that fit into the standard dimensions of kitchen elements make their installation acceptable in the kitchen, but also in another part of the house or apartment, where there is a connection to the chimney.

They are made in accordance with EN 12815, ISO 9001 and ISO 14001.



CHOPPED WOOD, UP TO 0,33 m



WOOD BRIQUETTES



Characteristics of BIO-PEK B cookers

- Hot water cookers for central heating, cooking and baking, designed for solid fuel heating.
- Part of the heat is transferred to the surrounding space through the upper heating plate.
- Properly dimensioned firebox and multiple passages for heat exchange ensure a high degree of efficiency of the cooker and allows cooking food on the upper heating plate and baking in the oven.
- The possibility of changing the position of the firebox grate using the built-in mechanism allows cooking and baking throughout the year.
- The spacious oven allows the use of standard dishes.
- The refractory glass and thermometer on the oven door allow you to monitor the progress of baking.
- A thermal heat exchanger and a connection for a thermal valve are installed at the factory, which enables the installation of cooker in closed central heating systems.
- The large door and the firebox of the boiler enable heating with large solid fuel (length up to 33 cm) and easy cleaning and maintenance.
- The circulation pump of the central heating system is controlled by a factory-installed thermostat.
- Cookers can be connected to the chimney from the rear, from a side or upper right side of the cooker - right version, or from the rear, from a side or upper left side of the boiler - left version
- The basic delivery of the boiler includes a draft regulator and a thermomanometer.
- They are economical and environmentally friendly.
- The installation of the CAS /-B/-S/-BS buffer tank enables easy cooking and baking all year round.

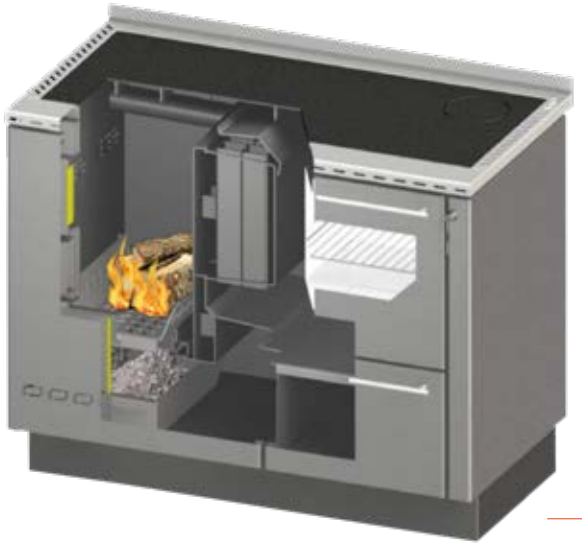

Cooker cross section



Stainless steel heating plate frame



Three possible chimney connections



Inbuilt box for wood



Boiler door, thermomanometer, draft regulator



Heating system connections, thermal protection connections





Version

BIO-PEK B – D

Cookers made in the right version (oven and chimney connection on right side)

BIO-PEK B – L

Cookers made in the left version (oven and chimney connection on left side)

Delivery and obligatory additional equipment



Delivery:

– Cooker with casing, built-in thermomanometer, draft regulator, pump thermostat and cleaning accessories, grate lifting lever, on a wooden pallet

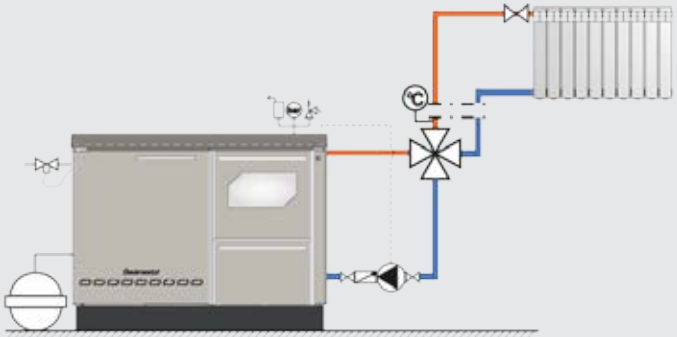

Directly to the heating system

– Manual 4-way mixing valve

Closed heating system

– Thermal valve, safety airvent group (2.5 bar) and expansion vessel

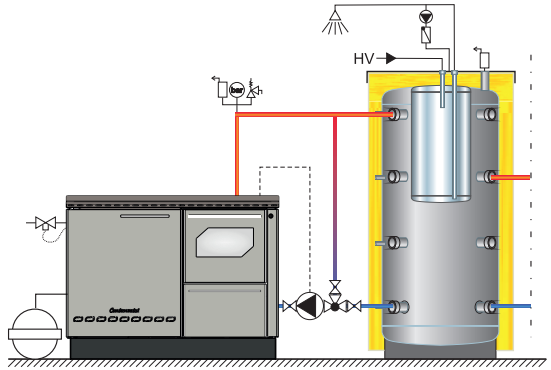

With CAS buffer tank

– Buffer tank CAS /-B/-S/-BS, 3 - way thermostatic valve LTC, VTC...(60 °C)

Closed heating system

– Thermal valve, safety airvent group (2.5 bar) and expansion vessel

Open heating system

– Open expansion vessel

Basic dimensions

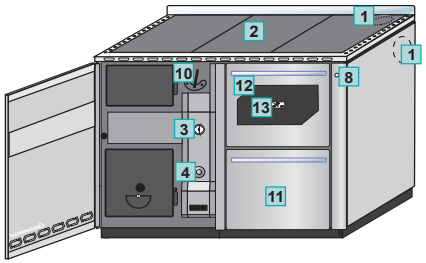

(Right version)

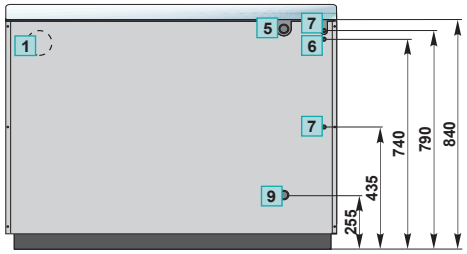

(Left version)

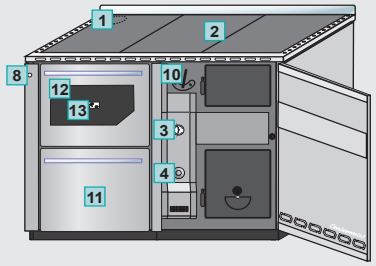

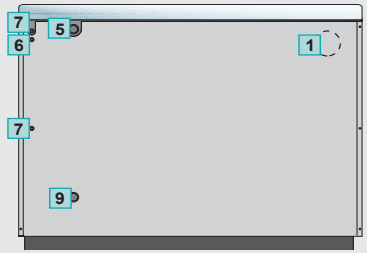

BIO-PEK B		BIO-PEK 17 B	BIO-PEK 23 B	BIO-PEK 29 B
Rated heat output	(kW)	18	24	30
Heat output on the water side	(kW)	12	19	25
Heat output on the surrounding area	(kW)	6	5	5
Cooker water content	(lit.)	23	30	38
Flue gas tube diamete*	Ø (mm)	150	150	150
Chimney underpressure	(Pa)	15	18	20
Boiler depth	(mm)	635	635	635
Boiler width	(mm)	1000	1100	1150
Boiler height	(mm)	885	885	885
Oven dimension (WxHxD)	(mm)	400x260x415	400x260x415	400x260x415
Upper boiler door opening	(mm)	240x150	240x150	240x150
Main flow	(R)	1"	1"	5/4"
Return flow	(R)	1"	1"	5/4"
Maximum operating temperature	(°C)	90	90	90
Maximum operating overpressure	(bar)	2,5	2,5	2,5
Cooker mass	(kg)	205	234	258
Energy efficiency class		A	A	A

* The inner diameter of the chimney is determined according to the power of the cooker and the height of the chimney and must almost always be larger than the diameter of the flue gas tube

1	Flue gas tube opening
2	Heating plate
3	Thermomanometer
4	Draft regulator
5	Cooker main flow
6	Connection for temperature sensors of thermal valve
7	Heat exchanger connection
8	Ignition handle
9	Cooker return flow
10	Working mode selector handle (only models 23 and 29)
11	Box for wood
12	Oven
13	Oven thermometer

EKO-CK P

Combined hot water boiler

Steel hot water boilers **EKO-CK P** with a nominal heat output of 14 to 110 kW are designed for heating with solid fuel, pellets or fuel oil.

They are intended for heating from the smallest to large buildings either as a basic heat source or, which is increasingly common today, as an alternative source.

They are recognizable by the successful combination of modern technologies and quality building materials with ease of installation and use. A range of proven technical solutions makes these boilers safe and reliable in operation.

The possibility of easy installation of equipment on pellets or fuel oil is a special value of these boilers. They are manufactured in accordance with the European standard EN 303-5.



CHOPPED WOOD, UP TO 0,5 m



WOOD BRIQUETTES



CHARCOAL



WOOD PELLETS



FUEL OIL

WITH ADDITIONAL EQUIPMENT



Characteristics of EKO-CK P boilers

- Hot water boiler for central heating designed for heating with several types of fuel (solid, pellets or liquid), with a nominal heat output from 14 to 110 kW.
- Adequately dimensioned combustion chamber with triple pass flue gas flow ensure a high degree of efficiency of the boiler, which makes it "economical".
- The boiler combustion chamber is made of high quality 5 mm boiler sheet metal.
- The large door and the combustion chamber of the boiler enable firing with large solid fuel and easy maintenance. Easy to change the opening direction of the upper and lower doors.
- Possibility of installing a thermal protection installation on the factory-prepared openings.
- The boilers are factory equipped with a thermostat that controls the operation of the pump.
- A separate boiler body, separate casing with thermal insulation is supplied, which enables easy transport and installation and reduces the risk of damage.
- The basic delivery of the boiler includes a boiler thermometer, cleaning accessories and ashtray.
- In the case of burning wood pellets, in Cm Pelet-set Touch there is a set for installing pellet burner on the lower boiler door, turbulators, pellet burner, pellet tank, transporter, pellet conveyor and boiler controller.
- In the case of heating with fuel oil, you need a set for the installation of oil burner and turbulators (the number of turbulators depends on the power of the boiler).
- The basic boiler controller of the fuel oil burner (EKO-CK / EKO-CKB P) is additionally delivered and is placed in the factory-prepared place on the upper cover of the boiler casing.
- The boiler has been tested and certified according to the European standard 303-5 and EN 304 and manufactured in accordance with the standards ISO 9001 and ISO 14001.



Boiler cross section



Thermometer, connection for draft regulator



Lower boiler door with possibility of changing the opening direction



Cleaning accessories



Boiler delivery



Thermostat connector for pump and connections for thermal protection installation



Delivery, obligatory and additional equipment

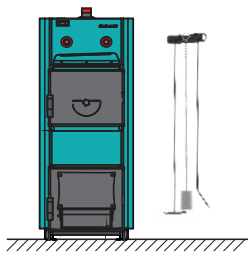

Delivery

- Boiler body with boiler doors
- Exterior casing with insulation and pump thermostat, set (screws, dowels, plug, rosettes), cleaning accessories (scraper, poker, brush, accessory holder)

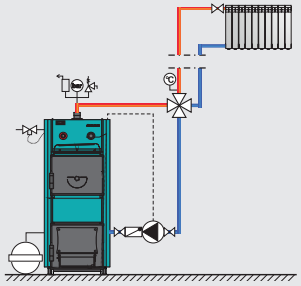

Solid fuel firing, without CAS buffer tank

- Draft regulator, manual 4-way mixing valve

Closed heating system

- Thermal valve, thermal exchanger, safety airvent group (2.5 bar) and expansion vessel

Open heating system

- Open expansion vessel

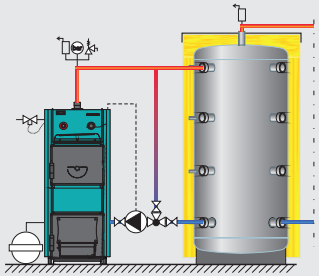

Solid fuel firing, with CAS buffer tank

- Draft regulator, buffer tank CAS (min. 30 lit./kW), 3-way thermostatic valve LTC, VTC, 3-way mixing valve with actuator CRA211...(60 °C)

Closed heating system

- Thermal valve, thermal exchanger, safety airvent group (2.5 bar) and expansion vessel

Open heating system

- Open expansion vessel

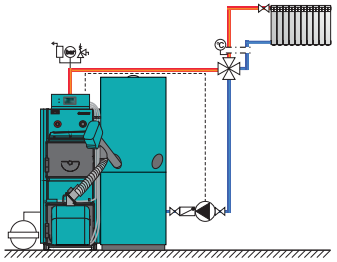

Wood pellet firing

- Cm Pelet-set Touch
- Manual 4-way mixing valve or buffer tank CAS (min. 10 lit./kW) and LTC, VTC...(60 °C)

Closed heating system

- Safety airvent group and expansion vessel

Open heating system

- Open expansion vessel

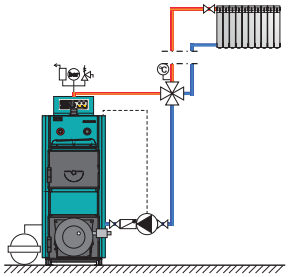

Fuel oil firing

- Boiler controller EKO-CK P / EKO-CKB P
- Fuel oil burner installation set with turbulators
- Fuel oil burner
- Manual 4-way mixing valve

Closed heating system

- Safety airvent group and expansion vessel

Open heating system

- Open expansion vessel

Basic dimensions

1	Main flow
2	Thermometer
3	Draft regulator openings
4	Upper boiler door
5	Lower boiler door
6	Pellet / fuel oil burner installation opening
7	Primary air flap
8	Pump thermostat connector
9	Thermal protection mount openings (1" female thread)
10	Flue gas tube
11	Flue gas box cleaning opening
12	Return flow
13	Filling/draining

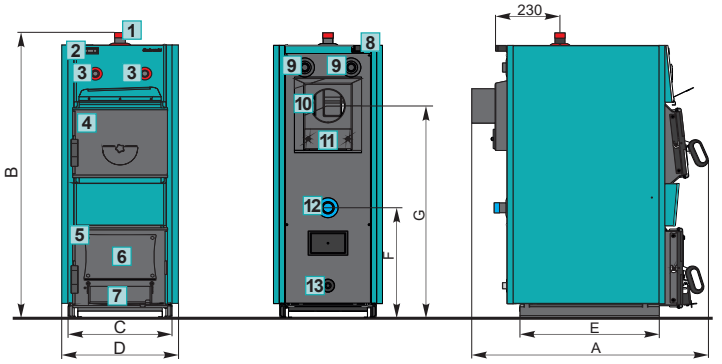

EKO-CK P		14	20	25	30	35	40	50	60	70	90	110
Rated heat output	(kW)	14	20	25	30	35	40	50	60	70	90	110
Boiler water content	(l)	59	60	64	67	76	78	96	118	135	140	157
Boiler mass	(kg)	234	241	250	270	290	313	352	373	432	469	506
Flue gas tube diameter*/height (G)	Ø (mm)	150/930	150/930	150/930	160/930	160/930	180/930	180/930	180/1025	200/1085	200/1085	200/1085
Burner opening (HxW)	(mm)	170x165	170x165	170x165	170x165	170x165	210x165	210x165	210x165	210x165	210x165	210x165
Upper boiler door opening (HxW)	(mm)	321x273	321x273	321x273	371x273	421x273	471x273	471x273	471x273	471/275	521/275	521/275
Lower boiler door opening (HxW)	(mm)	321x322	321x322	321x322	371x322	421x322	471x322	471x322	471x322	471/422	521/422	521/422
Chimney underpressure	(Pa)	15	16	18	19	20	21	23	25	26	29	31
Main/Return flow	(R)	5/4"	5/4"	5/4"	5/4"	5/4"	5/4"	5/4"	5/4"	6/4"	2"	2"
Filling/draining	(R)	1/2"	1/2"	1/2"	1/2"	1/2"	1/2"	1/2"	1/2"	1"	1"	1"
Flue gas temperature (fuel oil)	(°C)	170	170	170	170	170	170	180	180	190	200	200
Flue gas temperature (wood)	(°C)	190	190	190	190	190	190	220	220	230	240	240
Maximum operating temperature	(°C)	90	90	90	90	90	90	90	90	90	90	90
Maximum operating overpressure	(bar)	2,5	2,5	2,5	2,5	2,5	2,5	2,5	2,5	2,5	2,5	2,5
Boiler depth (A)	(mm)	985	985	1020	1020	1020	1020	1142	1142	1250	1250	1350
Boiler height (B)	(mm)	1255	1255	1255	1255	1255	1255	1255	1355	1435	1435	1435
Boiler body width (C)	(mm)	420	420	420	470	520	570	570	570	570	620	620
Total boiler width (D)	(mm)	470	470	470	520	570	620	620	620	640	690	690
Boiler base depth (E)	(mm)	565	565	600	600	600	600	725	725	815	815	915
Return flow connection height (F)	(mm)	485	485	485	485	485	485	485	485	630	630	630
Maximum log length	(mm)	500	500	500	500	500	500	500	500	500	500	500
Energy efficiency class		A	A	A	A	A	A	A	A	A	A	A

* The inner diameter of the chimney is determined according to the power of the boiler and the height of the chimney and must almost always be larger than the diameter of the flue gas tube

EKO-CKB P

Combined hot water boiler with DHW tank

Steel hot water boilers **EKO-CKB P** with a nominal heat output of 20 to 50 kW are designed for heating with solid fuel, pellets or fuel oil.

They are members of the EKO-CK P family of boilers, and their special feature is the built-in stainless-steel domestic hot water tank immersed in boiler water. This makes the boiler extremely interesting, as it ensures constant heating of domestic hot water in the tank without additional investment.

They are recognizable by the successful combination of modern technologies and quality building materials with ease of installation and use.

A range of proven technical solutions makes these boilers safe and reliable in operation. The possibility of easy installation of equipment on pellets or fuel oil is a special value of these boilers.

They are made in accordance with the European standard EN 303-5.



CHOPPED WOOD, UP TO 0,5 m



WOOD BRIQUETTES



CHARCOL



WOOD PELLETS



FUEL OIL

WITH ADDITIONAL EQUIPMENT



Characteristics of EKO-CKB P boilers

- Hot water boiler for central heating designed for heating with several types of fuel (solid, pellets or liquid), with a nominal heat output of 20 to 50 kW.
- The domestic hot water tank is made of high-quality stainless steel, which guarantees high hygienic conditions, and the immersion of the tank in the boiler water enables rapid heating of the entire amount of domestic hot water.
- The built-in domestic hot water tank in the boiler doesn't require a special circulation pump, which would otherwise be required if the tank was located outside the boiler.
- Adequately dimensioned combustion chamber with triple pass flue gas flow ensure a high degree of efficiency of the boiler, which makes it "economical".
- The boiler combustion chamber is made of high quality 5 mm boiler sheet metal.
- The large door and the combustion chamber of the boiler enable firing with large solid fuel and easy cleaning and maintenance. Easy to change the opening direction of the upper and lower doors.
- Possibility of installing a therm. protection installation on the factory-prepared openings.
- The boilers are factory equipped with a thermostat that controls the pump.
- A separate boiler body, separate casing with thermal insulation is supplied, which enables easy transport and installation and reduces the risk of damage.
- The basic delivery of the boiler includes a boiler thermometer and cleaning accessories and ashtray.
- In case of burning wood pellets, the Cm Pelet-set Touch includes a set for installing pellet burner on the lower boiler door, turbulators, pellet burner, pellet tank, pellet conveyor and boiler controller.
- In the case of heating with fuel oil, a set for the installation of an oil burner and turbulators are required (the number depends on the power of the boiler).
- The basic boiler controller of the fuel oil burner is additionally supplied and is placed in the factory-prepared place on the upper cover of the boiler casing.
- The boiler has been tested and certified according to the European standard EN 303-5 and EN 304 and manufactured in accordance with the standard ISO 9001 and ISO 14001.



Boiler cross section



Thermometer



Lower boiler door
with possibility of changing the
opening direction



Cleaning accessories



Boiler delivery



Thermostat connector for pump,
connections for DHW, thermal
protection and main flow of the boiler



Delivery, obligatory and additional equipment

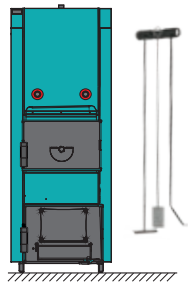

Delivery

- Boiler body with boiler doors
- Exterior casing with insulation and pump thermostat, set (screws, dowels, plug, rosettes), cleaning accessories (scraper, poker, brush, accessory holder)

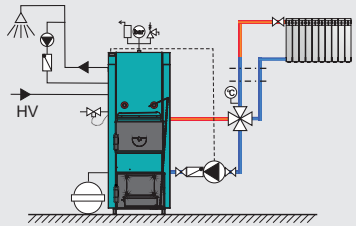

Solid fuel firing, without CAS buffer tank

- Draft regulator, manual 4-way mixing valve

Closed heating system

- Thermal valve, safety airvent group (2.5 bar) and expansion vessel

Open heating system

- Open expansion vessel

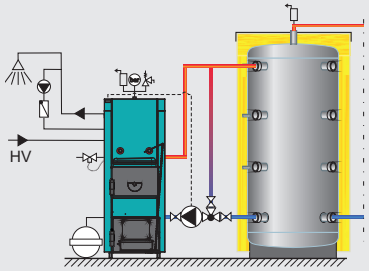

Solid fuel firing, with CAS buffer tank

- Draft regulator, buffer tank CAS (min. 30 lit./kW), 3-way thermostatic valve LTC, VTC... (60 °C)

Closed heating system

- Thermal valve, safety airvent group, (2.5 bar) and expansion vessel

Open heating system

- Open expansion vessel

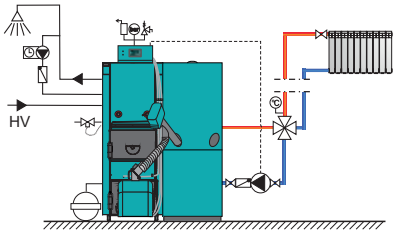

Wood pellet firing

- Cm Pelet-set Touch
- Manual 4-way mixing valve or buffer tank CAS (min. 10 lit./kW) and LTC, VTC...(60 °C)

Closed heating system

- Safety airvent group and expansion vessel

Open heating system

- Open expansion vessel

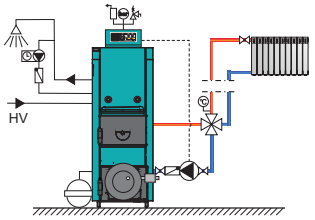

Fuel oil firing

- Boiler controller EKO-CK / EKO-CKB P
- Fuel oil burner installation set with turbulators
- Fuel oil burner
- Manual 4-way mixing valve

Closed heating system

- Safety airvent group and expansion vessel

Open heating system

- Open expansion vessel

Basic dimensions

EKO - CKB P		20	25	30	35	40	50
Rated heat output	(kW)	20	25	30	35	40	41
DHW tank water content	(l)	65	72	80	80	80	100
Boiler water content	(l)	81	87	90	98	106	118
Boiler mass	(kg)	284	293	320	329	355	411
Flue gas tube diameter*	Ø (mm)	150	150	160	160	180	180
Burner opening (HxW)	(mm)	170x165	170x165	170x165	170x165	210x165	210x165
Upper boiler door opening (HxW)	(mm)	321x273	321x273	371x273	421x273	471x273	471x273
Lower boiler door opening (HxW)	(mm)	321x322	321x322	371x322	421x322	471x322	471x322
Chimney underpressure	(Pa)	16	18	19	20	21	23
Flue gas temperature (fuel oil)	(°C)	170	170	170	170	170	180
Flue gas temperature (wood)	(°C)	190	190	190	190	190	220
Maximum operating temperature	(°C)	90	90	90	90	90	90
Main/Return flow	(R)	5/4"	5/4"	5/4"	5/4"	5/4"	54"
Filling/draining	(R)	1/2"	1/2"	1/2"	1/2"	1/2"	1/2"
DHW connections	(R)	3/4"	3/4"	3/4"	3/4"	3/4"	3/4"
Maximum operating overpressure	(bar)	2,5	2,5	2,5	2,5	2,5	2,5
Boiler body width (C)	(mm)	420	420	470	520	570	570
Boiler base depth (F)	(mm)	565	600	600	600	600	725
Total boiler depth (A)	(mm)	983	1020	1020	1020	1020	1140
Total boiler width (D)	(mm)	515	515	565	615	665	665
Total boiler height (B)	(mm)	1610	1610	1610	1610	1610	1610
Flue gas tube height (E)	(mm)	930	930	930	930	925	925
Maximum log length	(mm)	500	500	500	500	500	500
Energy efficiency class		A	A	A	A	A	A

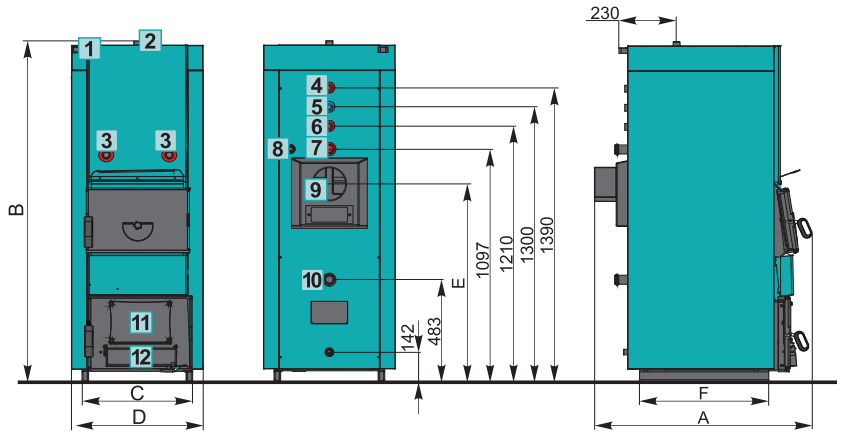

1	Thermometer
2	Safety / airvent line
3	Draft regulator openings
4	Hot DHW
5	DHW circulation
6	Cold DHW
7	Main flow
8	Thermal protection sensor mounting hole (1/2" female thread)
9	Flue gas tube
10	Return flow
11	Pellet/fuel oil burner installation opening
12	Primary air flap

* The inner diameter of the chimney is determined according to the power of the boiler and the height of the chimney and must almost always be larger than the diameter of the flue gas tube

EKO-CKS

Hot water boiler fired with solid fuel

Steel hot water boilers **EKO-CKS** with a nominal heat output of 150 to 380 kW are intended for installation in open central heating systems and are designed for firing with solid fuel.

They are intended for heating medium to large buildings. They can be made for direct connection to the chimney (natural draft of flue gases with the chimney) or for connection to the chimney via cyclone with fan (only EKO-CKS 250, 300, 380).

They are recognizable by the successful combination of modern technologies and quality building materials with ease of installation and supervision. A range of proven technical solutions makes these boilers safe and reliable in operation.



CHOPPED WOOD, UP TO 1,3 m



WOOD BRIQUETTS



CHARACOAL



Characteristics of EKO-CKS boilers

- Hot water steel boiler for central heating, power 150-380 kW fired with solid fuel (wood logs, wood briquettes, charcoal,...).
- Adequately dimensioned combustion chamber with triple pass flue gas flow ensure a high degree of efficiency of the boiler, which makes it "economical".
- The large door and the combustion chamber of the boiler enable heating with large solid fuel and easy cleaning and maintenance.
- The spacious upper boiler door allows easy and quick cleaning of the boiler from the front.
- A separate boiler body, separate casing with thermal insulation is supplied, which enables easy transport and reduces the risk of damage.
- The advantage of these boilers is the possibility of installing the boiler casing after connecting the boiler to the installation.
- These boilers are installed only on open central heating systems.
- Possibility of installing cyclone with fan for flue gas extraction.
- The boiler is manufactured in accordance with ISO 9001 and ISO 14001.



Boiler cross section



Thermometer, draft regulator connection



Upper and lower boiler door



Connections



Boiler delivery





Delivery, obligatory and additional equipment

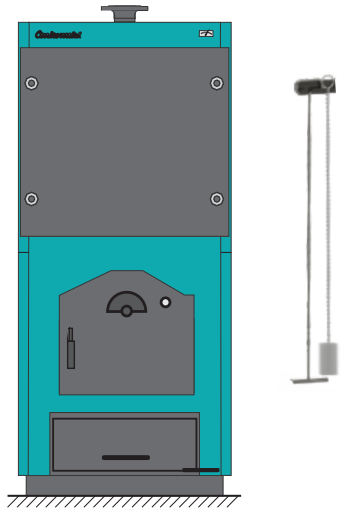

Delivery

- Boiler body with boiler door
- Exterior casing with insulation, thermometer, draft regulator, cleaning accessories (scraper, brush, accessory holder)

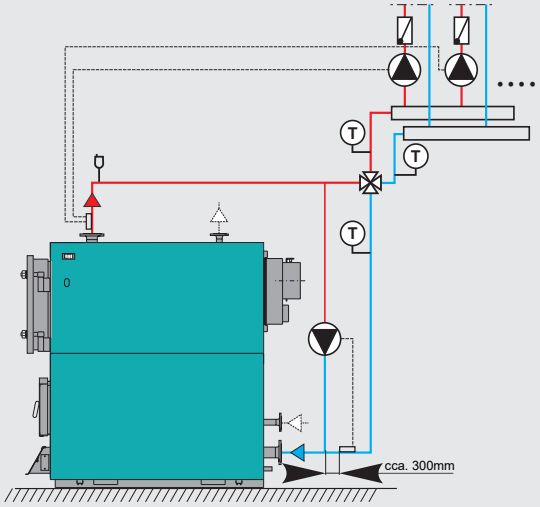

Connection to the heating system

- Safety pump and contact pipe thermostat (0-65 °C)
- Manual 4-way mixing valve
- Open expansion vessel

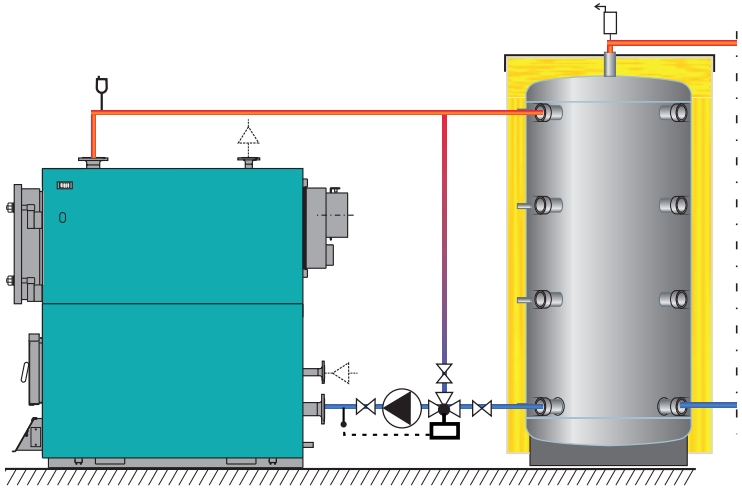

Connection to heating system with buffer tank CAS (recommendation)

- Boiler pump
- 3-way motorized mixing valve with regulator (as ESBE CRA)
- CAS buffer tank (min. 30 lit./kW)
- Open expansion vessel

Possible accessories

- Cyclone with fan and controller

Basic dimensions

EKO-CKS		150	200	250	300	380
Rated heat output	(kW)	110-150	150-200	200-250	250-300	300-380
Boiler water content	(l)	380	520	790	963	1155
Total boiler mass	(kg)	80	1050	1405	1625	1888
Flue gas tube diameter*	Ø (mm)	250	300	300	300	300
Flue gas tube height (H)	(mm)	1285	1300	1705	1705	1710
Chimney underpressure	(Pa)	34	38	42	45	50
Main/Return flow	(R)/(DN)	2"	2"	80	80	80
Filling/draining	(G)	1"	1"	1"	1"	1"
Safety line	(R)/(DN)	6/4"	6/4"	6/4"	6/4"	6/4"
Maximum operating temperature	(°C)	100	100	100	100	100
Maximum operating overpressure	(bar)	4	4	4	4	4
Total boiler depth (A)	(mm)	1590	1980	2000	2350	2350
Total boiler height (B)	(mm)	1605	1605	2105	2105	2100
Total boiler width (C)	(mm)	815	815	920	920	1065
Main flow height (D)	(mm)	1600	1600	2100	2100	2100
Return flow height (E)	(mm)	250	250	250	250	250
Safety line return height (F)	(mm)	500	500	500	500	500
Filling/draining height (G)	(mm)	155	155	155	155	155
Dimensions(I/J)	(mm)	990x745	1390x745	1390/850	1740/850	1740/995
Comb. chamber opening	(mm)	450x385	450x385	500x590	500x590	600x585
Maximum log length	(mm)	600	1000	1000	1350	1350

* The inner diameter of the chimney is determined according to the power of the boiler and the height of the chimney and must almost always be larger than the diameter of the flue gas tube

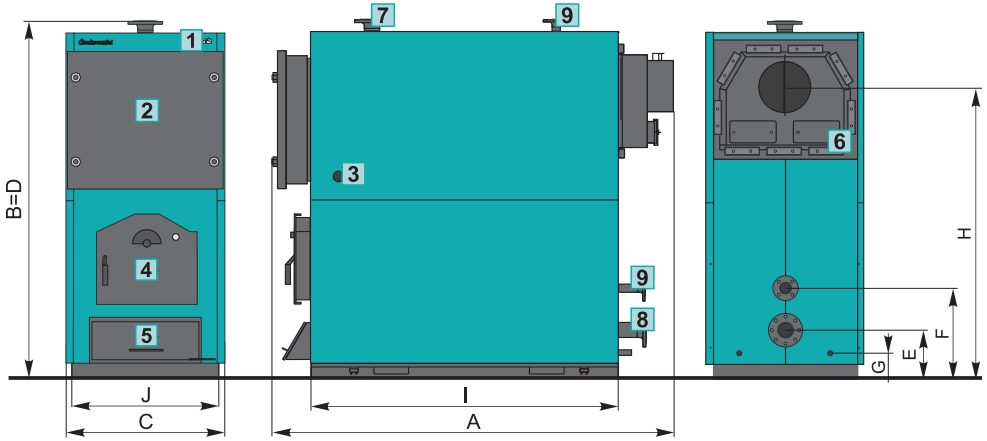

1	Thermometer
2	Upper door
3	Draft regulator installation opening
4	Lower door
5	Primary air flap / cleaning opening
6	Flue chamber cleaning opening
7	Main flow
8	Return flow
9	Open expansion vessel connections

EKO-CKS 500

Hot water boiler fired with solid fuel

Steel hot water boilers **EKO-CKS 500** with a nominal heat output of 500 kW are intended for installation in open central heating systems and are designed for firing with solid fuel.

They are made for connection to the chimney via a cyclone with a fan. The operation of the boiler (fan) is controlled by the boiler control unit.

They are recognizable by the successful combination of modern technologies and quality building materials with ease of installation and supervision.

A range of proven technical solutions makes these boilers safe and reliable in operation.



CHOPPED WOOD, UP TO 1,5 m



WOOD BRIQUETTES



CHARACOAL



Characteristics of EKO-CKS 500 boilers

- Hot-water steel boilers for central heating, nominal heat output 500 kW.
- They are designed for burning solid fuel (wood, wood briquettes, charcoal...).
- They are intended for installation in open central heating systems.
- Adequately dimensioned combustion chamber with triple pass flue gas flow ensure a high degree of efficiency of the boiler, which makes it "economical".
- The large door and the combustion chamber of the boiler enable heating with large solid fuel and easy cleaning and maintenance.
- The maximum operating overpressure of the boiler is 4 bar, which allows installation in larger heating systems.
- They are made for connection to the chimney only with cyclone with fan.
- The boiler comes with a cyclone CC 500, a flue gas fan and boiler controller.
- The cyclone is intended to separate particles from flue gases.
- The fan is used to draw fresh air into the boiler combustion chamber, extract flue gases from the boiler and expel them out through the chimney.
- The operation of the plant is controlled by boiler controller. Using the pump thermostat, it starts the heating pump above 75 °C in the boiler, controls the operation of the boiler bypass pump (0-60 °C) and the operation of the fan, has a built-in safety thermostat and a fan contactor.
- The spacious upper boiler door allows easy and quick cleaning of the boiler from the front.
- A separate boiler body, separate casing with controller, thermal insulation and a cyclone with a fan are supplied, which enables easy transport and reduces the risk of damage.
- The boiler is manufactured in accordance with ISO 9001 and ISO 14001.



Lower boiler door, primary air flap



Boiler controller



Exhaust fan



Cyclone







Boiler delivery





Delivery, obligatory and additional equipment

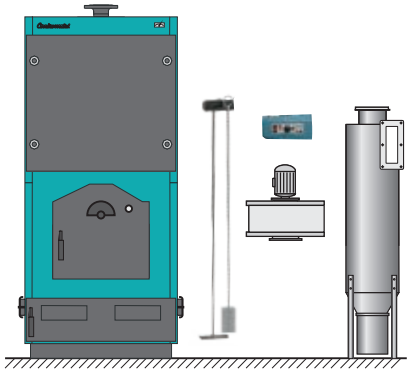

Delivery

- Boiler body with boiler doors
- Exterior casing with insulation, thermometer, cleaning accessories (scraper, brush, accessory holder)
- Cyclone CC for removing dust particles
- Flue gas fan
- Boiler controller

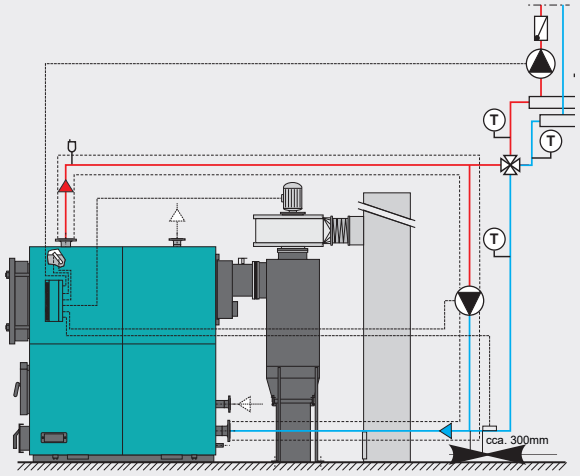

Connection to the heating system

- Bypass pump and pump thermostat (0-65 °C)
- Manual 4-way mixing valve
- Open expansion vessel

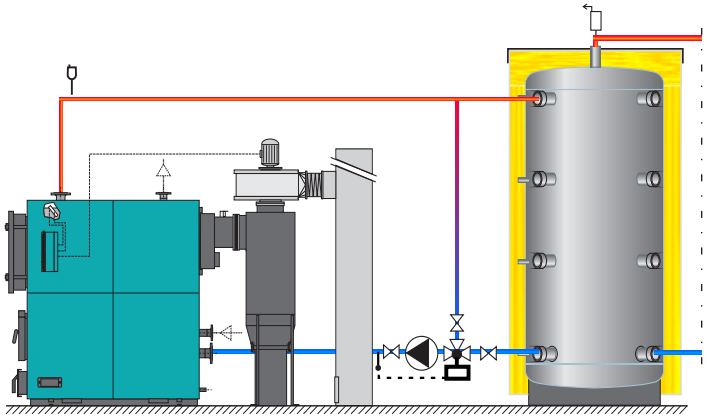

Connection to heating system with buffer tank CAS (recommendation)

- Boiler pump
- 3-way motorized mixing valve with regulator (as ESBE CRA)
- CAS buffer tank (min. 30 lit./kW)
- Open expansion vessel

Basic dimensions

EKO-CKS 500		500
Rated heat output	(kW)	380-500
Boiler water content	(l)	1700
Total boiler mass	(kg)	2920
Cyclone mass	(kg)	165
Fan mass	(kg)	44
Flue gas tube diameter (on the fan)	Ø (mm)	202
Flue gas tube height (J)	(mm)	2505
Main/Return flow	(DN)	100
Filling/draining	(G)	5/4"
Safety line	(DN)	50
Maximum operating temperature	(°C)	100
Maximum operating overpressure	(bar)	4
Total boiler dimensions (AxBxC)	(mm)	2665x2540x1391
Total length (E)	(mm)	3400
Total height (K)	(mm)	2860
Cyclone height (I)	(mm)	2360
Main flow height (D)	(mm)	2540
Return flow height (G)	(mm)	670
Safety line return height (H)	(mm)	920
Filling/draining height (F)	(mm)	600
Dimensions (L/M)	(mm)	2000/1245
Combustion chamber opening dimension	(mm)	615x700
Maximum log length	(mm)	1500

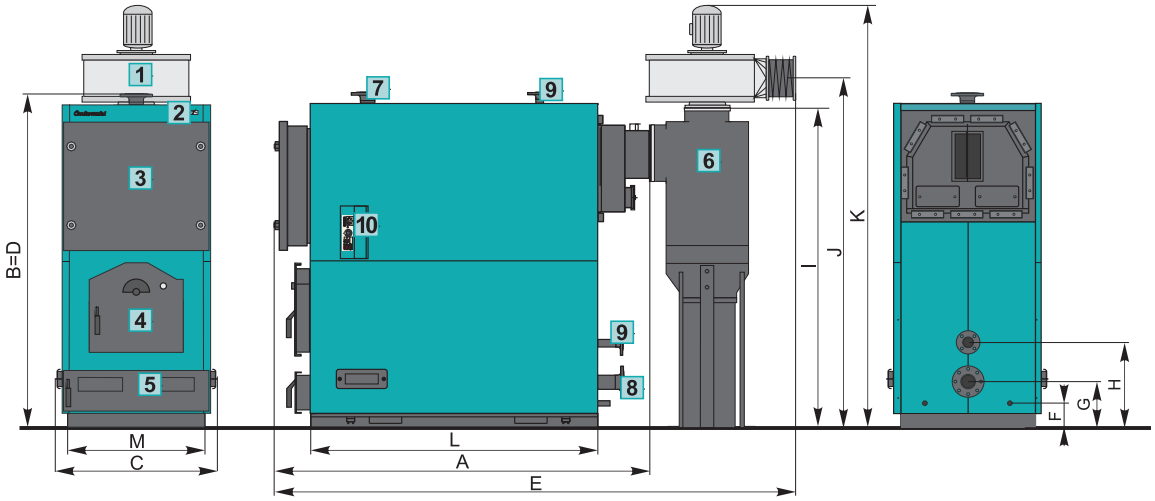

1	Exhaust fan
2	Thermometer
3	Upper door
4	Lower door
5	Primary air flap/cleaning opening
6	Cyclone
7	Main flow
8	Return flow
9	Open expansion vessel connections
10	Boiler controller

CIKLON CC

Cyclone for solid fuel boilers

Cyclone CC with fan and boiler controller are designed for installation on solid fuel boilers EKO-CKS from 250 to 380 kW prepared for their installation...

They are intended for the extraction of flue gases and the separation of solid particles from the flue gases. The operation of the boiler (fan) and the bypass pump and the heating pump are controlled by the boiler controller.

The installation of cyclone CC, fan and boiler controller reduces the required chimney height, unlike when the boiler is connected directly to the chimney.

They are made of high quality materials and protected with primer color.

Possibility of ordering CC cyclone with thermal insulation.









Characteristics of CYCLONE CC

- The cyclone is intended for the separation and collection of particles from flue gases.
- The fan is used for the extraction of flue gases (drawing fresh air into the boiler combustion chamber, extracting flue gases from the boiler and expelling them through the chimney into the environment).
- The operation of the boiler and cyclone fan is controlled by boiler controller. Using the pump thermostat, it starts the heating pump above 75 °C in the boiler, controls the operation of the boiler bypass pump (0-60 °C) and the operation of the fan, has a built-in safety thermostat and a fan contactor.
- They reduce the required chimney height, unlike when the boiler is connected directly to the chimney.
- They are delivered exclusively for EKO-CKS boilers from 250 to 380 kW prepared for their installation.

Basic dimensions

CYCLONE TYPE FOR BOILER TYPE		CC 250 EKO-CKS 250	CC 300-380 EKO-CKS 300/380
Cyclone height (H)	(mm)	1920	1945
Total cyclone and fan height (H1)	(mm)	2370	2400
Height of flue connection (H2)	(mm)	2045	2075
Height of connection to boiler (H3)	(mm)	1710	1710
Total cyclone depth (L)	(mm)	615	715
Total cyclone width (L1)	(mm)	565	665
Flue connection dimensions (AxB)	(mm)	160x160	Ø 202
Cyclone diameter (D)	(mm)	Ø 426	Ø 526
Cyclone mass	(kg)	88	114
Fan weight	(kg)	35	44
Fan power	(W)	550	1100
Electricity connection	(V/Hz)	400/50	400/50

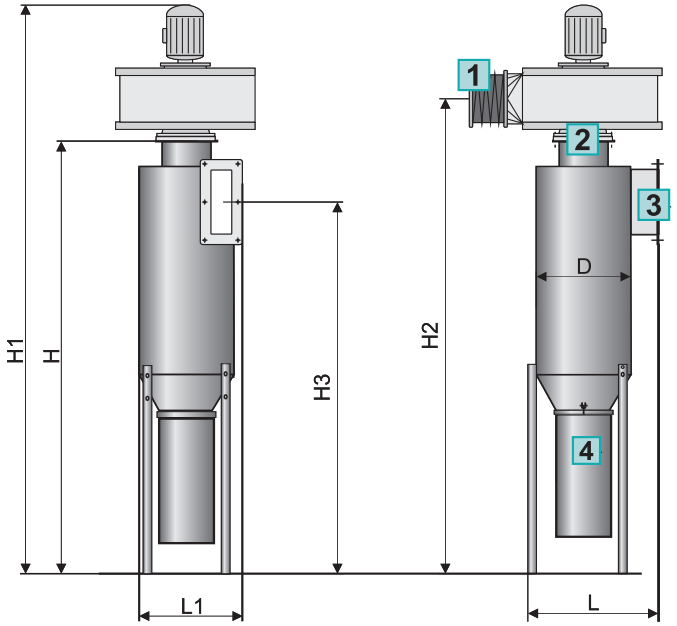

1	Chimney connection
2	Fan connection
3	Boiler connection
4	Flue gas particle box

OPC

Open expansion vessels OPC

Open expansion vessels **OPC** are intended for installation in open central heating systems.

They are made of welded construction steel and protected with primer color.

They are prepared for installation on a vertical surface (wall, bracket...) in a horizontal or vertical position.

They are factory delivered uninsulated.



Characteristics of OPC expansion vessels

- Volumes of open expansion vessels: 30, 50, 100, 200 liters.
- Material: construction steel HRN EN S235JRG2.
- Maximum operating overpressure – it is installed as the highest point of the open central heating system, open to the surrounding air.
- Prepared connections for installation.
- Standard delivery does not include insulation.
- They are made in accordance with ISO 9001 and ISO 14001.

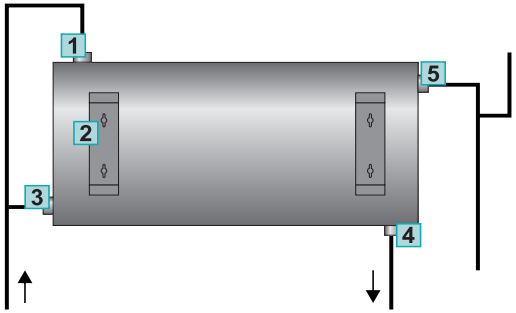

1	Safety line
2	Expansion vessel holder
3	Circulation line
4	Safety return line
5	Overflow and air discharge

OPC		30	50	100	200
Volume	(lit.)	30	50	100	200
Vessel length (A)	(mm)	500	750	835	1150
Vessel diameter (B)	Ø (mm)	300	300	400	480
Total width (C)	(mm)	350	350	455	535
Connections	(R)	1"	1"	5/4"	6/4"
Mass	(kg)	13	18	26	42

Basic dimensions

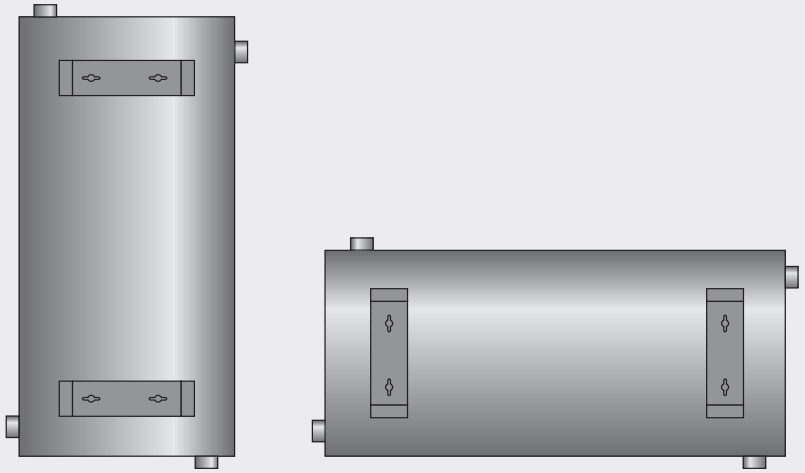

Vertical and horizontal position

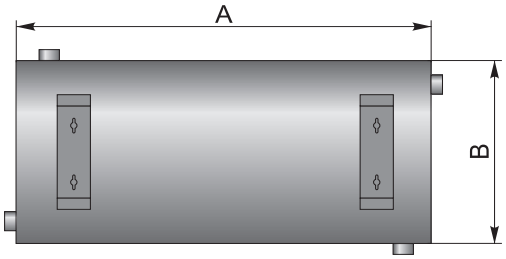

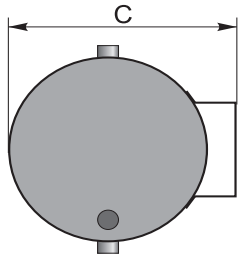

CentroPlus and CentroPlus-B

Two combustion chamber boiler

CentroPlus and **CentroPlus-B** steel hot water boilers with nominal heat output of 25, 35 and 49 kW have two separate combustion chambers in common boiler water. The left combustion chamber is used for burning solid fuel, and the right for burning pellets or liquid fuel. The possibility of combining solid fuel heating and automatic switching on of oil or pellet burners at the moment when solid fuel does not meet the need for heat, makes this boiler especially interesting.

A special feature of **CentroPlus-B** boilers is the built-in stainless steel tank for domestic hot water immersed in boiler water, which makes it extremely interesting, because it ensures constant heating of hot water in the tank without additional investment. The successful combination of modern technologies and quality construction materials with proven technical solutions give the boilers safety and reliability in operation with ease of installation and use. They are made in accordance with the European standard EN 304 and EN 303-5.





CHOPPED WOOD, UP TO 0,5 m



WOOD BRIQUETTES



CHARCOAL



WOOD PELETS



FUEL OIL

WITH ADDITIONAL EQUIPMENT

Characteristics of CentroPlus and CentroPlus-B boilers

- CentroPlus hot water boiler intended for central heating, fired with solid fuel, solid and liquid fuels and solid fuels and pellets, with a rated heat output of 25, 35 and 49 kW.
- Possibility of alternating use of both combustion chambers.
- Only one flue connection.
- Possibility of installing a thermal protection on the factory-prepared openings.
- A separate boiler body, separate cladding with thermal insulation and a separate oil burner or Cm Pelet-set Touch are delivered, which allows for easy transport and installation and reduces the risk of damage.
- The delivery of the boiler includes a thermometer, cleaning accessories, ashtrays and a draft regulator.
- The CentroPlus-B boiler (25, 35 and 49 kW) has a built-in stainless steel hot water tank that does not require a special circulation pump, which would otherwise be needed if the tank is outside the boiler.
- The boiler has been tested and certified according to the European standard EN 303-5 and EN 304 and manufactured in accordance with the standard ISO 9001 and ISO 14001.

Solid fuel combustion chamber

- Adequately dimensioned combustion chamber with triple pass flue gas flow ensure a high degree of efficiency of the boiler, which makes it "economical".
- The large door and the combustion chamber of the boiler allow heating with large solid fuel and easily cleaning and maintenance.

Liquid fuel / pellet furnace

- Properly dimensioned combustion chamber with turbulators ensures a high degree of boiler efficiency, which makes it "economical".
- Lot of water in the boiler reduces the number of starts and prolongs the life of the burner and saves energy.
- The right boiler door is prepared for the installation of a pellet/oil burner.



Thermometer, draft regulator connector



Boiler connections



Cable holders



Cleaning accessories



Boiler delivery CentroPlus



Boiler delivery CentroPlus-B





Delivery and obligatory additional equipment

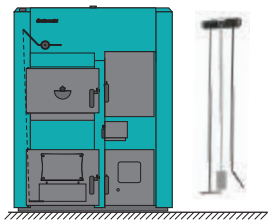

Delivery

- Boiler body with boiler doors
- Exterior casing with insulation and pump thermostat, draft regulator, set (screws, dowels, plug, rosettes), cleaning accessories (scraper, poker, brush, accessory holder)

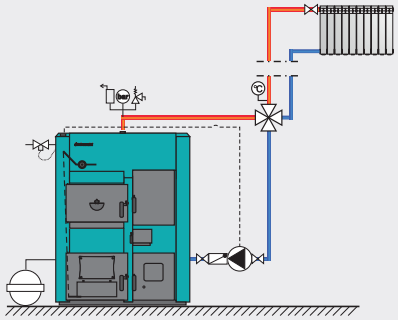

Solid fuel firing, without CAS buffer tank

- Manual 4-way mixing valve

Closed heating system

- Thermal valve, thermal exchanger (only 49 kW), safety airvent group (2.5 bar) and expansion vessel
- 2x thermal valve (for 49 kW)

Open heating system

- Open expansion vessel

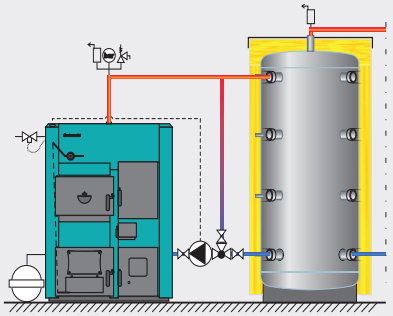

Solid fuel firing, with CAS buffer tank

- Buffer tank CAS (30 lit./kW), 3-way thermostatic valve LTC, VTC... (60 °C)

Closed heating system

- Thermal valve (25/35 kW) / 2x thermal valve + 2x heat exchanger (49 kW), safety-ventilation group (2.5 bar) and expansion vessel

Open heating system

- Open expansion vessel

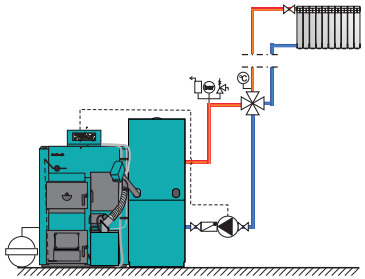

Wood pellet firing

- Cm Pelet-set Touch (25/35 kW) with fan flap
- Manual 4-way mixing valve or buffer tank CAS (30 lit./kW) and LTC, VTC...(60 °C)

Closed heating system

- Safety airvent and expansion vessel

Open heating system

- Open expansion vessel

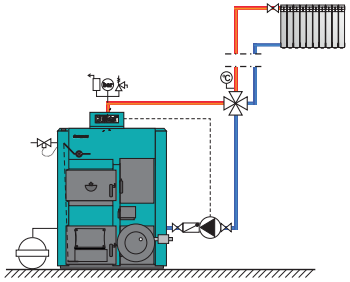

Fuel oil firing only

- Boiler controller EKO-CK/EKO-CKB P
- Fuel oil burner; manual 4-way mixing valve or buffer tank CAS and LTC, VTC... (60 °C)

Closed heating system

- Safety airvent group and expansion vessel

Open heating system

- Open expansion vessel

Basic dimensions

1	Thermometer
2	Pump thermostat connector
3	Safety line
4	DHW outlet connection
5	DHW recirculation
6	DHW inlet connection
7	Main flow
8	Thermal protection sensor mounting hole
9	Return flow
10	Filling/draining
11	Ash box, right side
12	Pellet/fuel oil burner installation door
13	Flue gas tube
14	Draft regulator

CentroPlus

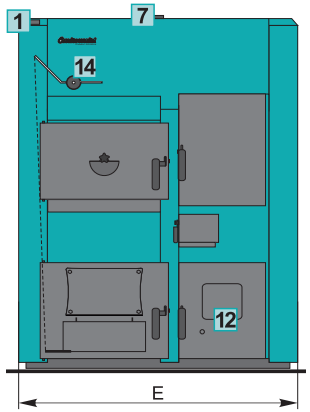

CENTROPLUS				
		25	35	50
Rated heat output	(kW)	25	35	49
Boiler water content	(l)	155	172	220
DHW tank water content	(l)	-	-	-
Boiler mass	(kg)	464	522	630
Flue gas tube diameter*/height	Ø (mm)	150/955	160/955	180/955
Chimney underpressure	(Pa)	17	19	22
Main/Return flow	(R)	5/4"	5/4"	5/4"
Safety line	(R)	3/4"	3/4"	3/4"
Filling/Draining	(R)	1/2"	1/2"	1/2"
DHW outlet/inlet connection	(R)	-	-	-
Recirculation connection	(R)	-	-	-
Maximum operating temperature	(°C)	90	90	90
Maximum operating overpressure	(bar)	2,5	2,5	2,5
Boiler body dimensions(AxBxC)	(mm)	1065x915x1260	1070x1105x1260	1140x1145x1260
Total boiler dimensions (DxExF)	(mm)	1065x915x1260	1070x1015x1260	1140x1145x1260
Boiler base depth	(mm)	635	635	710
Energy efficiency class		A	A	-

CENTROPLUS-B		
25	35	50
25	35	49
192	192	243
80	80	100
512	522	670
150/955	160/955	180/955
17	19	22
5/4"	5/4"	5/4"
3/4"	3/4"	3/4"
1/2"	1/2"	1/2"
3/4"	3/4"	3/4"
3/4"	3/4"	3/4"
90	90	90
2,5	2,5	2,5
1070x915x1560	1070x1015x1560	1140x1145x1560
1070x915x1560	1070x1015x1560	1140x1145x1560
635	635	710
A	A	-

CentroPlus-B

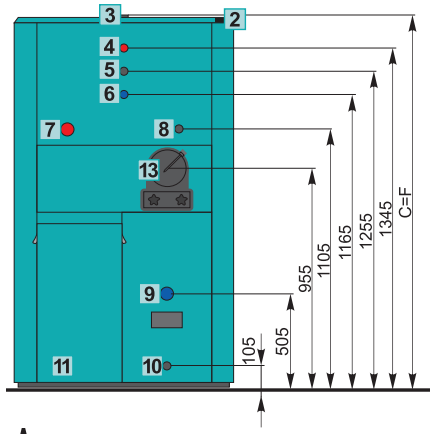

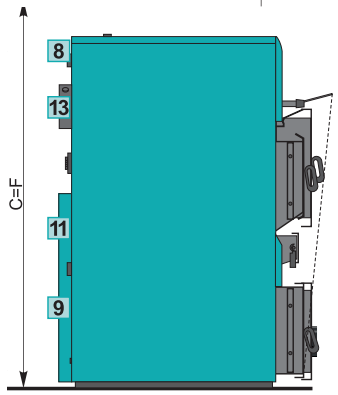

* The inner diameter of the chimney is determined according to the power of the boiler and the height of the chimney and must almost always be larger than the diameter of the flue gas tube



CentroPlus and CentroPlus-B boilers

FOR SOLID FUEL AND PELLET FIRING

CentroPlus and **CentroPlus-B** steel hot water boilers can be fired with pellets and solid fuel. For this type of heating, it is necessary to install a **Cm Pelet-set Touch with a fan flap**, a manual 4-way mixing valve or a buffer tank on the boiler.

In addition to firing only with pellets or only with solid fuel, a combination of firing with solid fuel and semi-automatic switching on of pellet burner is possible at a time when solid fuel does not meet the need for heat. The operation of this "mini" plant is controlled by digital controller in combination with a draft regulator when using solid fuel. The pellet tank is an integral part of the plant and is filled from the top (pellet tank volume 0.37 m^3 or 0.8 m^3). When burning wood pellets, the savings in fuel are up to 40 % compared to the heating system with fuel oil. It is also possible to install an oil burner and boiler controller EKO-CK/EKO-CKB P in the oil/solid fuel version on the boiler.

CentroPlus and CentroPlus-B

SOLID FUEL / PELLETS

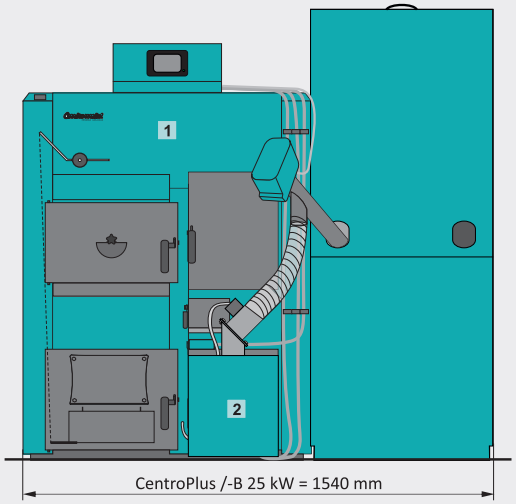



Basic parts

1	CentroPlus / CentroPlus-B boiler
2	Cm Pelet-set Touch with fan flap: - pellet burner - fan flap - pellet controller - pellet tank (0.37 or 0.8 m^3) - pellet transporter
3	Pellet controller CPREG-Touch



CentroPlus and CentroPlus-B boilers

FOR SOLID AND LIQUID FUEL FIRING

CentroPlus and **CentroPlus-B** steel hot water boilers can be fired with solid and liquid fuel. For this type of firing, it is necessary to install an oil burner and boiler controller EKO-CK/EKO-CKB P on the boiler. In addition to firing only **with liquid fuel or only solid fuel**, a combination of firing with solid fuel and semi-automatic switching on of the oil burner at the moment when the solid fuel does not meet the need for heat is also possible. The operation of this "mini" plant is controlled by boiler controller in combination with a draft regulator when using solid fuel. It is also possible to retrofit the Cm Pelet-set Touch to the boiler with a fan flap in the pellet/ solid fuel version.

CentroPlus and CentroPlus-B

SOLID FUEL / FUEL OIL

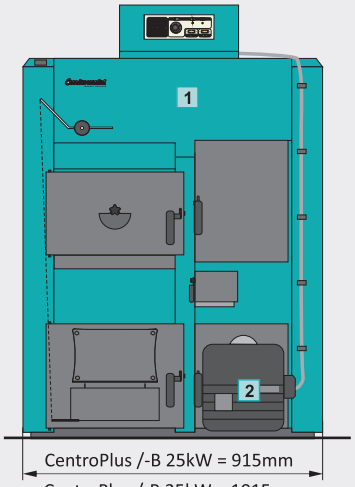

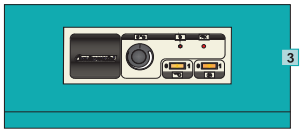

Basic parts

1	CentroPlus /CentroPlus-B boiler
2	Oil burner
3	EKO-CK/CKB controller



BioTec II

Wood gasification hot water boiler

BioTec II steel hot water boilers with a rated heat output of 25 to 45 kW are designed for wood combustion. They are intended for heating buildings ranging from small to medium-sized properties.

The pyrolysis principle ensures thorough fuel combustion. The spacious combustion chamber allows the use of logs up to 500 mm in length. A single fuel load lasts at least 4 hours at rated heat output, with the possibility of extending the burning time to a full day when heating demand is reduced.

The boiler is controlled by a multifunctional digital controller with a 7" touchscreen, which, together with a lambda sensor, ensures an optimal combustion process. The controller enables the management of two mixing heating circuits based on outdoor temperature, or one mixing heating circuit and domestic hot water preparation, as well as a solar circuit and an alternative boiler. The integrated Wi-Fi module enables remote monitoring and control of the operating parameters of the boiler and heating system via smartphone or computer.

The boiler is connected to the central heating system via a three-way thermostatic valve (60 °C) or a motorized three-way mixing valve and a CAS buffer tank. It has been tested and certified in accordance with EN 303-5 and meets Class 5 requirements.

Manufactured in accordance with ISO 9001 and ISO 14001 standards.



CHOPPED WOOD, UP TO 0,5 m



WOOD BRIQUETTES



BOILER CLASS 5

Wi Fi

ECODESIGN APPROVED ErP

Characteristics of BioTec-L boilers

- Boiler class 5, Ecodesign.
- Hot water boiler for central heating, designed for burning wood logs with a moisture content below 25% (air-dried for at least 1 year).
- A modern boiler that uses the pyrolysis principle to ensure thorough fuel combustion, reducing the need for cleaning to a minimum (depending on wood quality and boiler load).
- The design of the flue gas flow paths and the additional combustion of these gases ensure high boiler efficiency, making it exceptionally economical to operate.
- Environmentally friendly due to the low levels of harmful substances in the emitted flue gases.
- Three large doors and a spacious combustion chamber allow the use of logs up to 500 mm in length, as well as easy cleaning and maintenance.
- Designed for installation in open or closed central heating systems, exclusively via CAS buffer tanks with a minimum capacity of 40 litres/kW and a three-way thermostatic valve set to 60 °C or a motorised three-way mixing valve.
- Supplied factory-wired with an integrated multifunctional digital boiler controller featuring a 7" colour touchscreen.
- The factory-installed controller uses a lambda sensor, combustion chamber temperature sensor and flue gas temperature sensor to control the primary and secondary air supply and the modulating flue gas fan. In its standard configuration, it enables the control of up to two weather-compensated mixing heating circuits or one mixing heating circuit and one domestic hot water preparation circuit. It also enables the control of a solar circuit and an alternative boiler.
- The integrated Wi-Fi module in the display enables connection to an online portal for remote monitoring and control of the boiler and heating system via smartphone, tablet or computer.
- The system can be upgraded with CM2K modules to control additional heating circuits (up to a maximum of 8 circuits) and connected to CSK/CSK-Touch room temperature correction units and a CAL alarm module.
- Manufactured in accordance with ISO 9001 and ISO 14001 standards.



Boiler cross section

Multifunctional controller with a touch screen





Delivery, obligatory and optional accessories



Delivery

- Boiler with casing, prewired, with 4 additional sensors, outdoor temperature sensor, cleaning accessories (2 x scraper, brush, cleaning accessory holder)

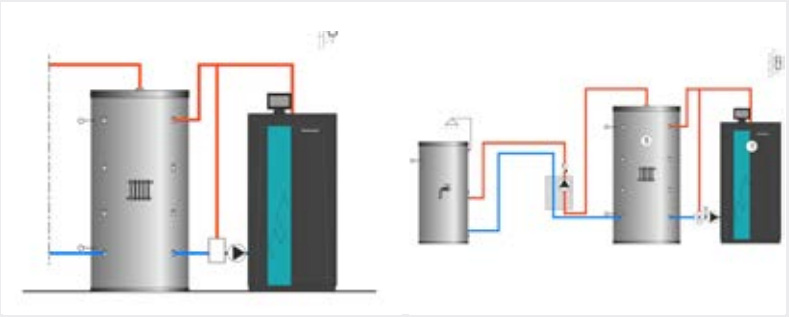

Obligatory: Buffer tank CAS connection

- Buffer tank CAS (min. 40 lit./kW)
- 3-way thermostatic valve LTC, VTC... (60 °C); or a 3-way mixing valve with actuator

Closed heating system

- Thermal valve, safety airvent group (2,5 bar) and expansion vessel

Open heating system

- Open expansion vessel

Connection to a system with one mixing heating circuit and DHW tank

- Buffer tank CAS (min. 40 lit./kW)
- 3-way thermostatic valve LTC, VTC... (60 °C)
- 3-way mixing valve with actuator
- DHW tank (TB, STB)

Closed heating system

- Thermal valve, safety airvent group (2.5 bar) and expansion vessel

Open heating system

- Open expansion vessel



Additional equipment

CAL

- Boiler error or warning signaling module with sound or light

CSK

- Room corrector

CSK-Touch

- Room corrector with touch screen



Additional equipment

CM2K control module for 2 heating circuits

- Control up to 2 heating circuits according to outdoor temp. (Control up to 2 mixing valves and up to 2 heating or DHW or recirculation pumps)
- Up to 4 CM2K modules can be connected (up to 8 heating circuits)
- Up to 2 room correctors CSK/ CSK- Touch per module can be connected

Basic dimensions

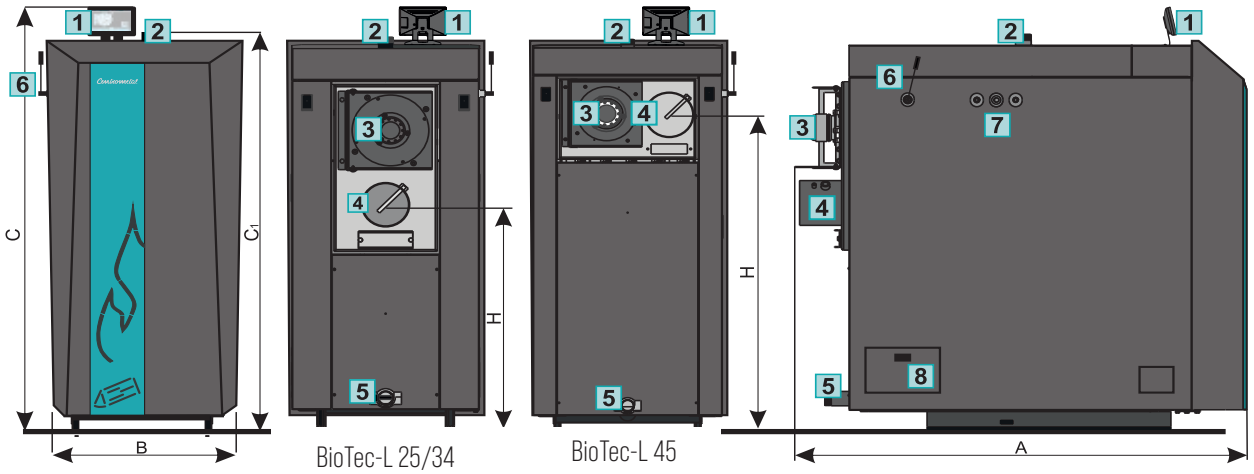

BIOTEC II		25	34	45
Nominal heat output	(kW)	25	34	45
Flue gas tube diameter*/height (H)**	Ø (mm)	150*/785**	160*/785**	180*/1290**
Main flow	(R)	6/4"	6/4"	6/4"
Return flow	(R)	6/4"	6/4"	6/4"
Filling/Draining	(R)	3/4"	3/4"	3/4"
Flue gas temperature	(°C)	130	130	130
Maximum operating temperature	(°C)	90	90	90
Maximum operating overpressure	(bar)	2,5	2,5	2,5
Total boiler depth (A)	(mm)	1400	1445	1385
Total boiler height** (C) / (C_1)	(mm)	1375**/1040**	1420**/1075**	1615**/1295**
Total boiler width (B)	(mm)	590	700	700
Log length	(mm)	450-550	450-550	450-550
Volume of wood firebox	(lit.)	90	144	176
Boiler water content	(lit.)	115	130	150
Total boiler mass	(kg)	519	606	677
Energy efficiency class		A+	A+	A+

1	Boiler controller
2	Main flow
3	Fan with motor
4	Flue gas tube
5	Return flow
6	Flue pipe cleaning lever
7	Place for installation of thermal valve
8	Side cleaning opening of flue chamber

* Inner diameter of the chimney is determined according to the power of the boiler and the height of the chimney and must almost always be larger than the diameter of the flue gas tube

** Possible adjustment +10/-10 mm

BioTec Plus

Two combustion chamber hot water boiler – wood gasification/pellet

Steel, two combustion chamber hot water boiler **BioTec Plus** is intended for firing wood logs and pellets. In the pellet combustion chamber is a factory-installed pellet burner with the function of automatic cleaning of the grate and firing pellets, and in the second combustion chamber the logs are burned by the principle of pyrolysis.

Multifunctional digital boiler controller using lambda probe and modulating underpressure fan optimizes combustion in both combustion chambers thus raising the efficiency of the boiler.

The pellet tank is a part of the boiler on which it is possible to install a system for automatic vacuum pellet supply or pellet conveyor filling from a larger tank.

Next to the boiler is obligatory to install an buffer tank (CAS). Boiler controller can be extended with a control module CM2K (control 2 heating circuits according to outdoor temperature, max. 4xCM2K), CM-WiFi box for connecting the boiler to the web portal, vacuum suction system...



CHOPPED WOOD, UP TO 0,5 m



WOOD BRIQUETTES



WOOD PELLETS



BOILER CLASS 5

Wi Fi READY

ECODESIGN APPROVED ErP

Characteristics of BioTec Plus boilers

- Boiler class 5, Ecodesign.
- Two combustion chamber hot water boiler on wood logs and wood pellets, power 25, 35 and 45 kW.
- Compact boiler with high efficiency and low maintenance needs (with standard automatic cleaning of the pellet grate, it is possible to additionally order automatic cleaning of flue passages).
- The factory-installed controller controls the boiler by means of a lambda probe, boiler sensor, boiler pyrolytic combustion chamber temperature sensor and flue gas temperature sensor by means of a modulating flue gas fan.
- The controller can also control 1 heating circuit with mixing valve and DHW circuit.
- Modulating boiler operation (30 -100 % power).
- Fuel level sensor in the pellet tank.
- Multifunctional digital controller with color touch screen runs the wood gasification (pyrolytic) process of combustion of the boiler with logs and can automatically ignite the pellet side of the boiler when there is no more wood in the boiler.
- Designed for installation in open or closed heating systems exclusively via buffer tank (CAS), minimum volume 40 lit./kW.
- The boiler has been tested and certified according to EN303-5 and meets Class 5 and is manufactured in accordance with ISO 9001 and ISO 14001.



Boiler cross section

Multifunctional controller with a touch screen





Delivery, obligatory and optional accessories

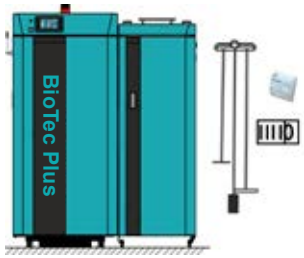

Delivery

- Boiler with casing on 2 wooden pallets (left side of the boiler on one pallet, right side of the boiler on the other pallet), prewired, with 4 additional sensors, outdoor temperature sensor, room corrector CSK and cleaning accessories (2 x scraper, brush, accessory holder for cleaning).

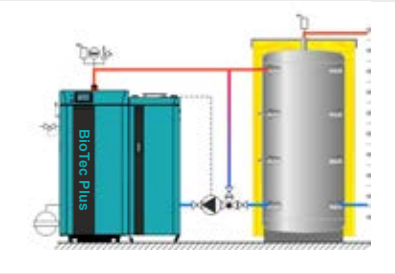

Obligatory: Buffer tank CAS connection

- Buffer tank CAS 40 lit./kW
- 3-way thermostatic valve LTC, VTC... (60 °C); or a 3-way mixing valve with actuator

Closed heating system

- Thermal valve, safety airvent group (2.5 bar) and expansion vessel;

Open heating system

- Open expansion vessel



Additional equipment

CAL

- Boiler error or warning signaling module with sound or light

CM WiFi-box

- Provides web portal monitoring and boiler management

Automatic cleaning of flue passage pipes

- Boiler controller controls the cleaning of the flue passage pipes in the boiler



Additional equipment

CM2K control module for 2 heating circuits

- Control up to 2 heating circuits according to outdoor temp. (Control up to 2 mixing valves and up to 2 heating or DHW or recirculation pumps)
- Up to 4 CM2K modules can be connected (up to 8 heating circuits)
- Up to 2 room correctors CSK/ CSK-Touch per module can be connected CSK

CSK

- Room corrector

CSK-Touch

- Room corrector with touch screen



Additional equipment

Pellet vacuum suction system

- Vacuum suction system with mole from the pellet storage
- Vacuum suction system from a large pellet tank (Centropelet box)
- Vacuum suction system by conveyor from the pellet storage
- Maximum 10 m long flexible pipes (in one direction) from pellet storage
- For DINplus or ENplus A1 pellets only

CVDOP

- Cyclone for pellet vacuum suction system to remove dust from pellets

Basic dimensions

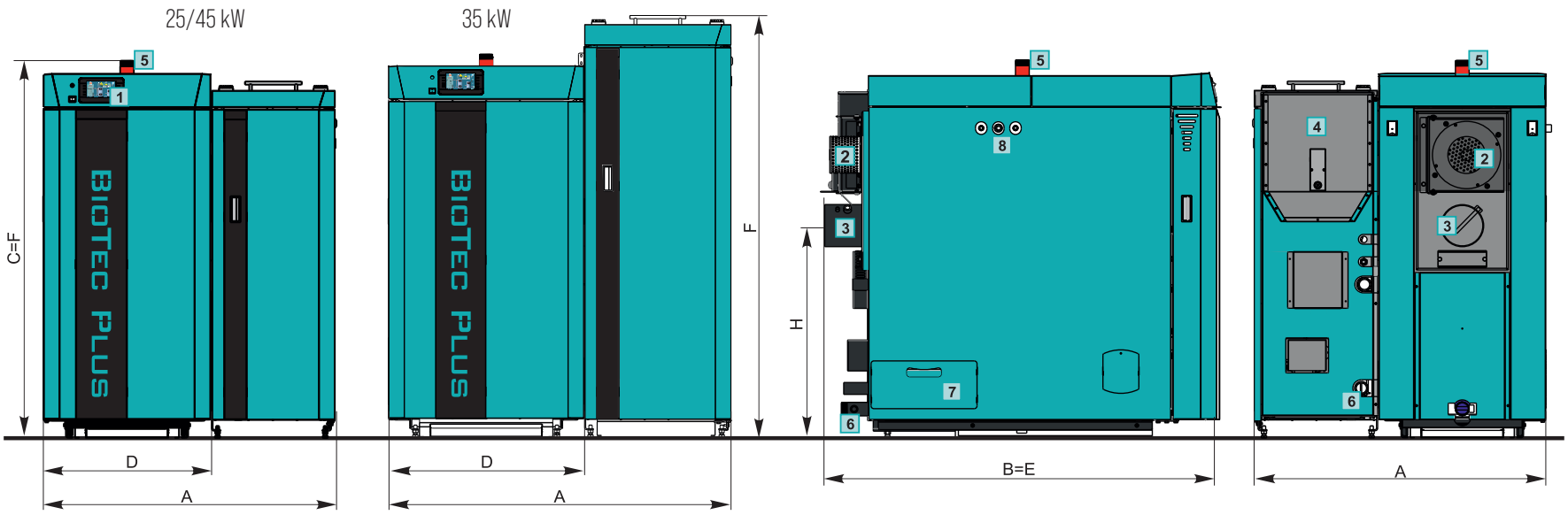

BioTec Plus		25	35	45
Nominal heat output - wood	(kW)	25	35	45
Nominal heat output - pellets	(kW)	25	35	45
Boiler width (A)	(mm)	1055	1255	1260
Boiler depth (B)	(mm)	1400	1450	1450
Boiler height (C)	(mm)	1350	1450	1585
Width for entering the boiler room (D)	(mm)	610	720	720
Depth for entering the boiler room (E)	(mm)	1385	1445	1405
Height for entering the boiler room (F)	(mm)	1350	1520	1590
Pellet tank volume	(lit.)	80	148	148
Main flow/Return flow	(G)	6/4"	6/4"	6/4"
Flue gas tube diameter*/Height (H)	Ø/mm	150/765	160/765	180/1265
Energy efficiency class		A+	A+	A+

1 Digital controller
2 Fan with motor
3 Flue gas tube connection
4 Pellet tank
5 Main flow
6 Return flow
7 Side cleaning opening of flue chamber
8 Place for installation of thermal protection

* Inner diameter of the chimney is determined according to the power of the boiler and the height of the chimney and must almost always be larger than the diameter of the flue gas tube

3-way thermostatic valve ESBE VTC 512

For installation in central heating systems, boiler + CAS

Three-way thermostatic valves **ESBE VTC 512** are intended for installation in central heating systems with solid fuel boilers (BioTec-L, BioTec-C, BioTec Plus, EKO-CK P, EKO-CKB P, CentroPlus, CentroPlus-B...) and buffer tanks CAS, all for the purpose of protecting boilers from condensation of water vapor from flue gases. Valves ESBE VTC 512 enable quick achievement and maintenance of the operating temperature of the boiler by changing the ratio of the opening of the return flow from the installation of central heating and short-circuit line from the boiler. A circulation pump must also be installed in heating systems where ESBEVTC 512 are installed.



ESBE VTC 512

ESBE VTC 512 valve characteristics

- ESBE VTC 512 is a 3-way thermostatic valve with external threaded connections.
- They are installed in heating systems with solid fuel boilers with buffer tanks CAS.
- Maintaining the temperature in the boiler minimum 60 °C which protects the boiler from condensation.
- The built-in thermostat starts releasing water from the return flow of the installation when the boiler reaches temperature 60 °C.
- At a boiler temperature below 60 °C, the circulation pump returns water from the main flow to the return flow via a short circuit trough the VTC valve.
- The circulation pump must be selected according to the size of the boiler, i.e. from the table with recommended pumps.

Boiler heat output (kW)	VTC 512 connection (external thread)	Circulation pump type		Buffer tank CAS volume with pyrolytic boilers BioTec-C, BioTec-L i BioTec Plus
		Grundfos	Wilo	
14-25	5/4''	Alpha1 25/32-40	Yonos PICO 30/1-4	Minimum 40 lit./kW boiler
26-40	5/4''	Alpha1 32-60	Yonos PICO 30/1-6	
41-50	5/4''	Alpha1 32-80	Yonos PICO 30/1-8	
51-60	5/4''	Alpha1 32-40	Yonos PICO 30/1-8	
61-70	6/4''	Alpha1 32-40	Yonos PICO 30/1-8	

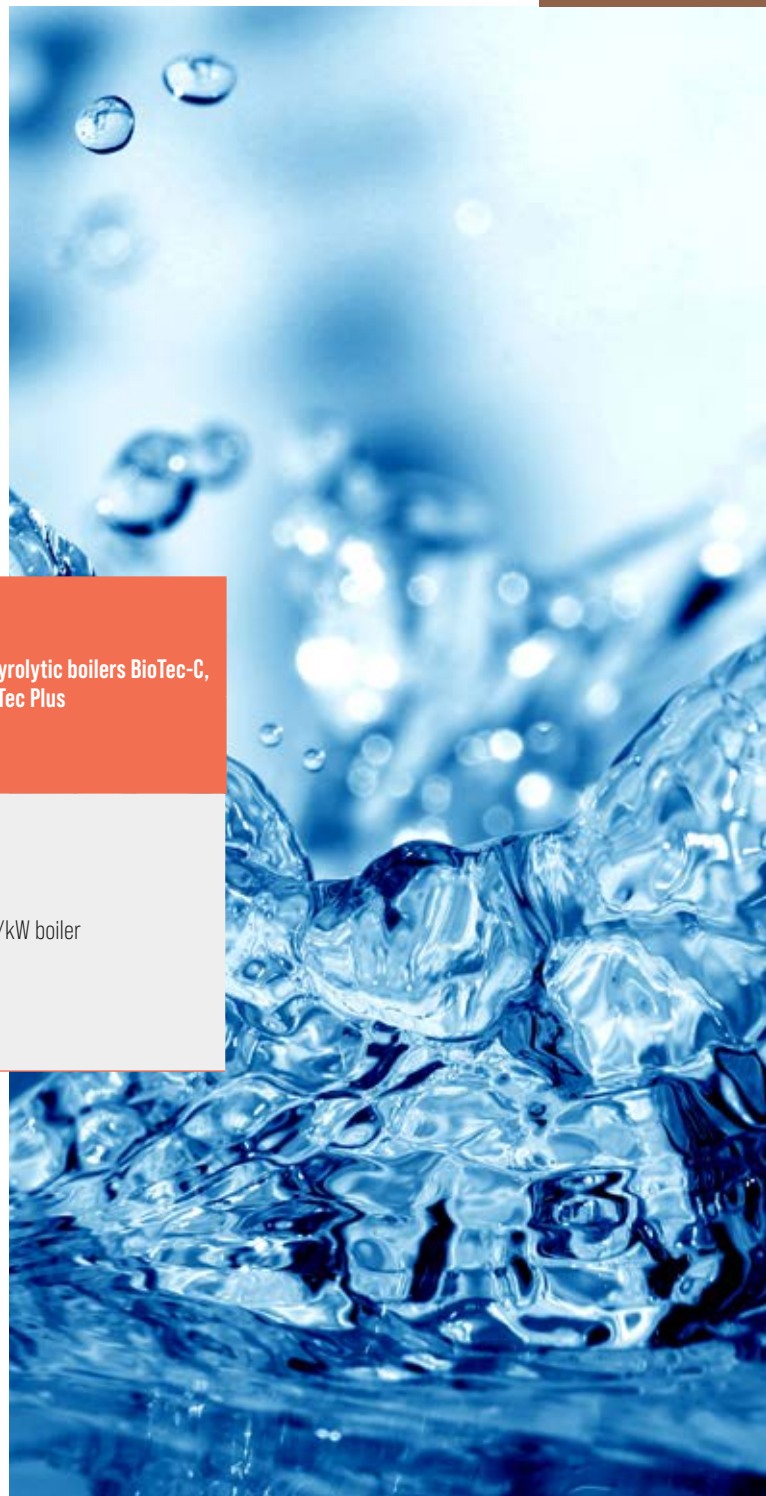

3-way thermostatic valve ESBE LTC 361, 381
Actuator with controller ESBE CRA 211/121

For installation in central heating systems, boiler + buffer CAS

3-way thermostatic valves (groups) **ESBE LTC 361** and **381** are intended for installation in central heating systems with solid fuel boilers (BioTec-L, BioTec-C, BioTec-Plus, EKO-CK P, EKO-CKB P, CentroPlus, CentroPlus-B) and buffer tanks CAS, all for the purpose of protection of boilers from condensation of water vapor from flue gases.

ESBE LTC 361 and 381 enable quick achievement and maintenance of the boiler operating temperature by changing the openness ratio of the return flow from the central heating and short-circuit installation with the boiler, maintaining the boiler return line always above 60 °C. They have a built-in circulation pump, thermostatic valve (60 °C), shut-off valves, thermometers and insulation.

ESBE CRA 211/121 is a motor drive with a regulator to maintain a constant temperature of the return line (set to 60 °C).

ESBE CRA 211 is intended for installation on 3-way mixing valves from DN15 to DN50. They are intended for installation next to boilers of smaller power, when the boiler regulation does not lead to the protection of the return line.

ESBE CRA 121 is intended for installation on 3-way mixing valves from DN50 to DN150. They are intended for installation next to boilers of higher power (from 71-580 kW) when the boiler regulation does not protect the return line.



ESBE LTC

ESBE CRA

Characteristics of ESBE LTC 361, 381 and ESBE CRA 211/121

- They are installed in heating systems with solid fuel / pellet / wood chip boilers with buffer tanks CAS.
- Maintaining the temperature in the boiler min. 60 °C (ESBE LTC 361, 381 i CRA 211/121 set to 60 °C) for protecting the boiler from condensation.
- At a boiler temperature below 60 °C, the circulation pump returns water from the flow to the return via a short circuit through the group / valve.
- The LTC 361 i 381 groups are equipped with a circulation pump, three shut-off valves and control thermometers, one on each line.
- Actuators CRA 211/121 must be set on 60 °C, installed on 3-way mixing valves and a circulating pump of adequate size is required.
- CRA 211 is intended for 3-way mixing valves up to DN50. Supplied with transformer (230 V) and temperature sensor.
- CRA 121 is intended for 3-way mixing valves from DN65 to DN150. Supplied with detachable controller with display, transformer (230 V) and temperature sensor.

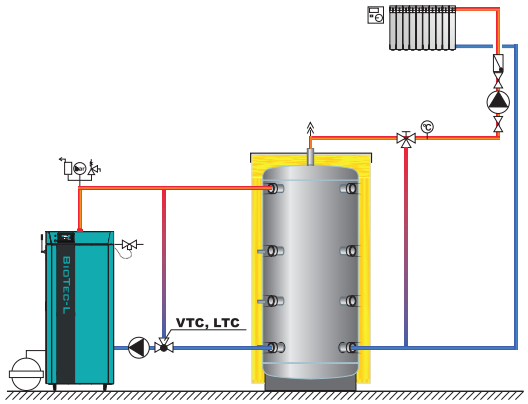

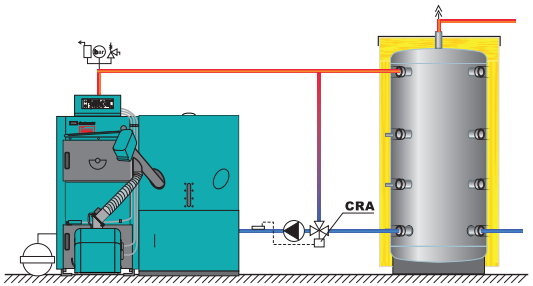

Recommended volumes of buffer tanks CAS	
With wood pellet boilers	minimum 10 lit./kW
With wood chip boilers	minimum 12 lit./kW
With solid fuel boilers	minimum 30 lit./kW
With pyrolytic boilers	minimum 40 lit./kW

Proposal for selection of LTC groups and CRA actuators for 3-way mixing valves:

Boiler heat output (kW)	LTC 361 connection (internal thread)	LTC 381 connection (internal thread)	VTC 512 connection	CRA 211 connection + 3-way valve + pump	CRA 121 connection + 3-way valve + pump
14-40	5/4''	--	--	--	--
41-50	--	6/4''	--	--	--
51-70	--	--	see page 60	--	--
71-110	--	--	--	DN50	--
111-580	--	--	--	--	DN65-DN150

CentroPelet Z6N / A10 / ZR12

CentroPelet Z6N

CentroPelet A10

CentroPelet ZR12

Pellet stove (hot air heating)

Pellet room stoves **CentroPelet Z6N**, **CentroPelet A10** and **CentroPelet ZR12** are designed for heating a room with air using a built-in fan. They are made of steel construction, modern design and high efficiency.

All stoves come standard with digital regulation that allows easy control of the stove. The CentroPelet A10 and CentroPelet ZR12 models are supplied with a remote control as standard, while the CentroPelet Z6N model has a remote control available as an additional option, which gives users the ability to adjust to their own needs.

The great advantage of these stoves is their ease of use and maintenance, as well as their quick installation – there is no need for radiators, pipes and complex installations.



WOOD PELLETS



Characteristics of CentroPelet Z6N /A10 / ZR12 pellet stoves

- Pellet stove for hot air heating by blowing warm air into the room.
- Available in several colors: anthracite, black, gray, white, red... (depending on model and availability).
- The stove supplies pellets independently using a screw conveyor and ignites them using an electric heater.
- Automatic stove on/off possible.
- The economy function allows automatic power reduction when the room temperature approaches the set value.
- Possibility of setting switching times (only using the remote control, supplied as standard with models A10 and ZR12).
- A Wi-Fi module can be ordered additionally, with which it is possible to monitor temperatures and control the stove operation via a mobile application.
- Integrated pellet tank.



Stove controller CentroPelet Z6N and CentroPelet ZR12



Remote control (for CentroPelet A10)



Combustion chamber grate



Stove controller CentroPelet A10



Remote control (for CentroPelet ZR12)

Available colors

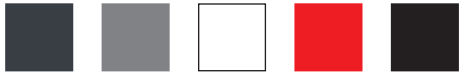





Delivery and obligatory accessories

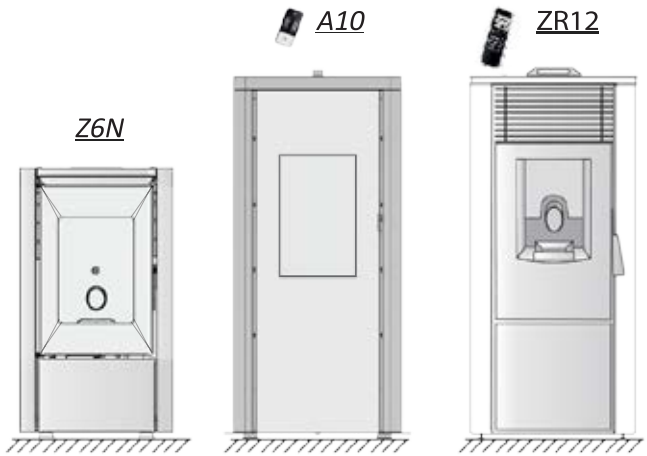

Delivery

- Pellet stove with controller
- Remote control
  (CentroPelet A10, CentroPelet ZR12; for CentroPelet Z6N (available as an additional option)

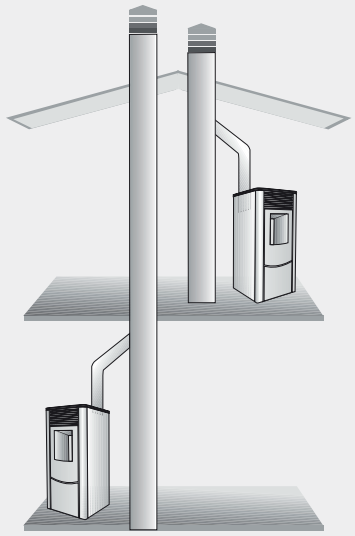

Flue gas exhaust

- One stove on one chimney

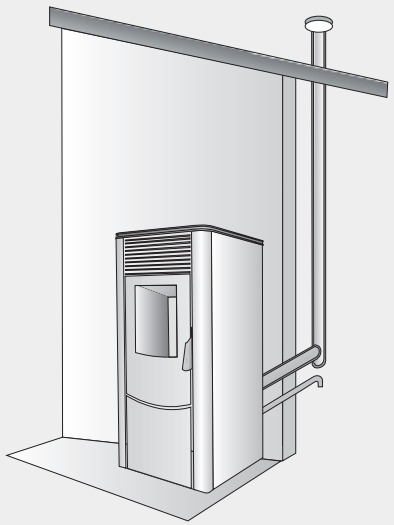

Flue gas exhaust

- External flue pipes that must be connected according to local regulations



Additional equipment

- Chimney flue connection set (flue gas tube 1 m, flue gas tube 0,5 m, T-piece cover, T-piece, Silicone rosette, Elbow 90°)

Basic dimensions

CentroPelet Z6N

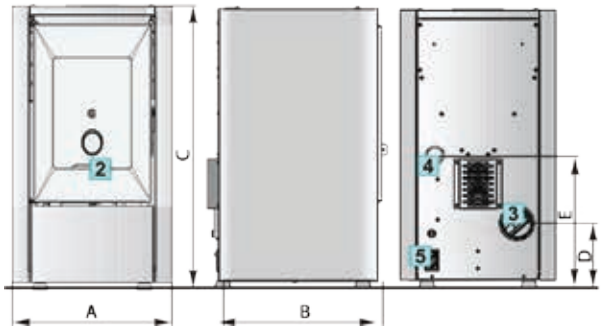

CentroPelet A10



CentroPelet ZR12

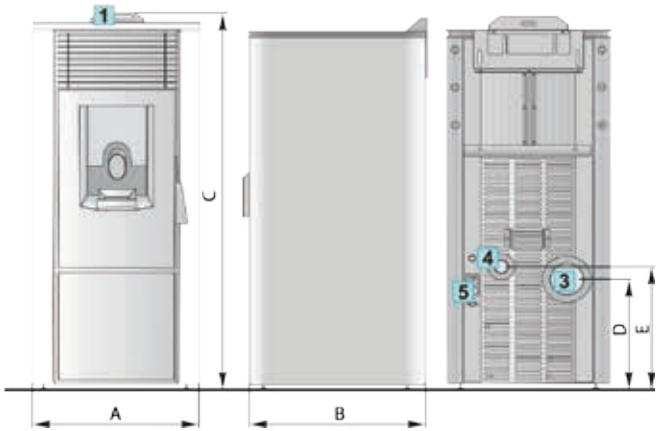

CentroPelet		Z6N	A10	ZR12
Heat output	(kW)	2,8-6,2	3,4-8,3	2,64-9,05
Pellet consumption	(kg/h)	0,7-1,4	0,8-1,9	0,6-2,6
Efficiency	(%)	87,6-89,1	90,3-91,6	89,5-91,3
Flue gas tube diameter	Ø (mm)	80	80	80
Tank volume	(kg)	11	15	13
Autonomy	(h)	7-14	8,5-20	6,5-18
Power consumption at nominal heat output	(W)	100-300	100-330	115-300
Mass	(kg)	55	55	91
Width (A)	(mm)	425	440	495
Depth (B)	(mm)	431	465	490
Height (C)	(mm)	765	965	1000
Dimension (D)	(mm)	172	156	260
Dimension (E)	(mm)	363	367	300

1	Controller
2	Burning chamber grate
3	Flue gas outlet connection
4	Fresh air supply connection
5	Main switch

CentroPelet ZS10

Pellet room stove (hot air heating)

CentroPelet ZS are hot air pellet stoves intended for heating the room/s with air with the help of a built-in fan.

They are steel construction, high efficiency, and due to their modern design do not take up much space in the room.

They are delivered with a remote control and digital controller through which the operation of the stove can be controlled and a weekly program can be selected.

They have the possibility of duct distribution of hot air to other rooms (2 ducts).



WOOD PELLETS



Characteristics of CentroPelet ZS pellet stoves

- Pellet stove for hot air heating by blowing warm air into the room.
- Possibility of duct distribution of hot air to other rooms. The two outlets at the back of the stove can be connected to other rooms with air ducts. The total maximum length of the air ducts is 4 m.
- It is possible to manually regulate how much air will be distributed in the room and how much through the ducts.
- Available in three colors: white, gray, red.
- The stove is supplied with pellets using a screw conveyor and ignites the musing an electric heater.
- Automatic switching on/off of the stove is possible.
- The economy mode function allows automatic power reduction when the room temperature approaches the set point.
- Possibility to set timers with the help of a remote control.
- Integrated pellet tank.



Stove controller



Remote control



Grate



Flue passage cleaning lever



Burning chamber grate

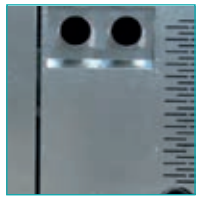

Air duct connection forhot air distribution

Available colors

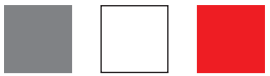





Delivery and obligatory accessories

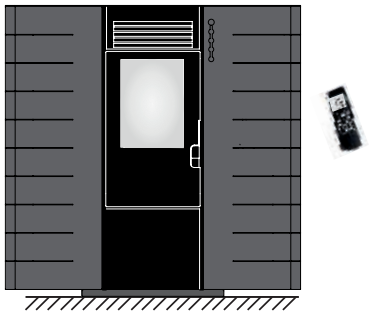

Delivery

- Pellet stove with in ardboard packaging
- Remote control

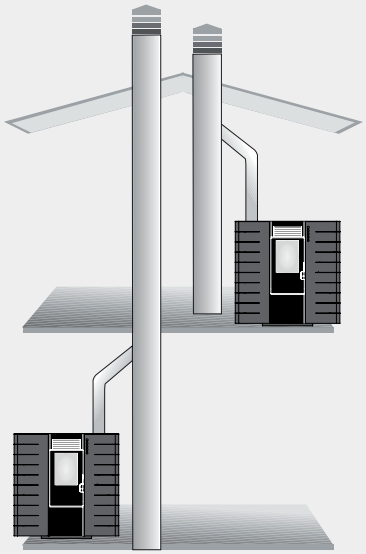

Flue gas exhaust

- One stove on one chimney

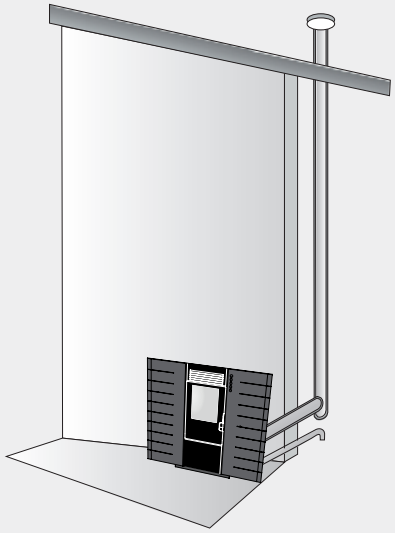

Flue gas exhaust

- External flue pipes that must be connected according to local regulations



Additional equipment

- Chimney flue connection set (flue gas tube 1 m, flue gas tube 0,5 m, T-piece cover, T-piece, Silicone rosette, Elbow 90°)

Basic dimensions



CentroPelet		ZS10
Heat output	(kW)	2,9-9,0
Pellet consumption	(kg/h)	0,62-1,98
Efficiency	(%)	95,93-92,66
Flue gas tube diameter	Ø (mm)	80
Pellet tank volume	(kg)	10
Autonomy	(h)	11-24
Power consumption at nominal heat output	(W)	100
Noise level (min-max)	(dB)	35-55
Mass	(kg)	77
Dimensions (AxBxC)	(mm)	935x280x935

1	Controller
2	Main switch
3	Flue gas outlet connection
4	Fresh air supply connection
5	Pellet tank

CentroPelet ZV

WiFi READY

Pellet stove (hot air and central heating)

CentroPelet ZV hot water stoves are fired with wood pellets and are intended for space heating with the hot air and water via radiator central heating.

They are steel construction, modern design and high efficiency. They have a built-in circulation pump, safety valve, pressure switch, expansion vessel and automatic air vent pot.

Supplied as standard with remote control and digital controller through which the operation of the stove can be controlled and selected weekly program.



WOOD PELLETS



Characteristics of CentroPelet ZV pellet stoves

- Pellet stove for air + water heating by blowing warm air into the room and connecting to radiators.
- Available in three colors: white, gray, red.
- Pellet stove is supplied with pellets using a screw conveyor and ignites them using an electric heater.
- Automatic switching on/off of the stove is possible.
- The economy mode function allows automatic power reduction when the room temperature approaches the set temperature.
- Possibility to adjust the speed of the fan to blow hot air into the room.
- Possibility to set timers.
- They are delivered as standard with a built-in circulation pump, safety valve, pressure, switch, expansion vessel and automatic airvent pot.
- Integrated pellet tan.



Stove controller



Remote control



Grate



Expansion vessel, flue gas fan



Burning chamber

Available colors

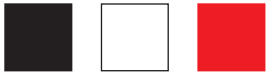





Delivery and obligatory accessories

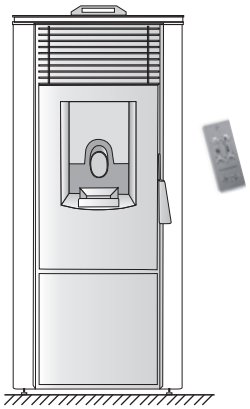

Delivery

- Pellet stove with controller, in cardboard packaging
- Remote control

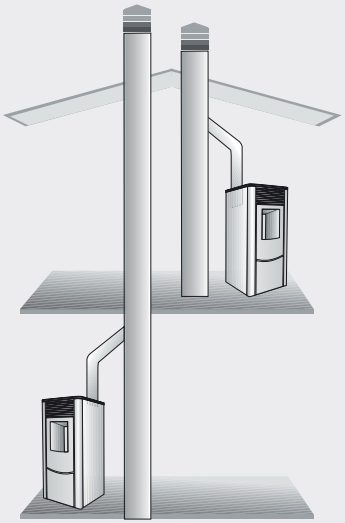

Flue gas exhaust

- One stove on one chimney

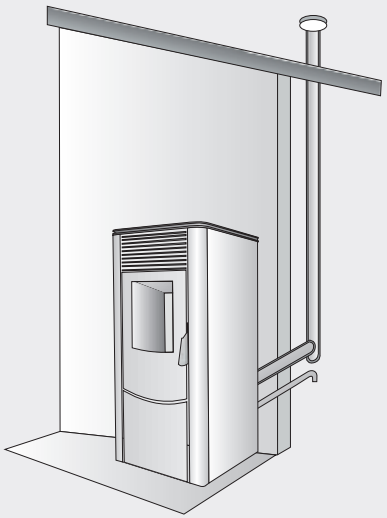

Flue gas exhaust

- External flue pipes that must be connected according to local regulations



Additional equipment

- Chimney flue connection set
  Ø 80 - for ZV 14-24
  Ø 100 - for ZV 32
- Flue pipe 1 m, flue pipe 0,5 m, cover T-piece, T-piece, silicone rosette, elbow 90°, flue pipe 0,25 m, elbow 45°

Basic dimensions

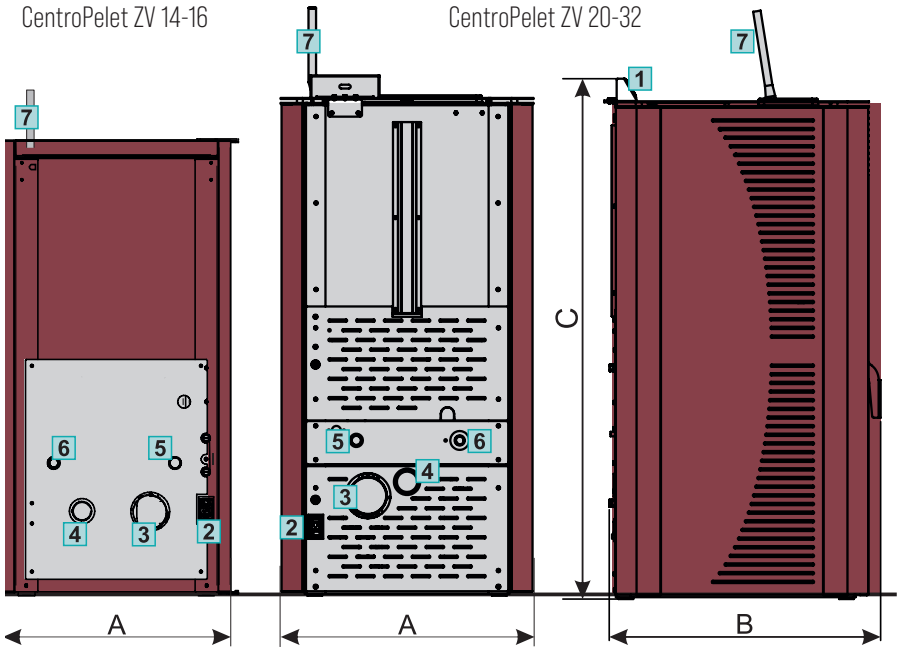

1	Controller
2	Glavni prekidač
3	Flue gas outlet connection
4	Fresh air supply connection
5	Main flow
6	Return flow
7	Flue passage cleaning lever

CentroPelet		ZV14	ZV16	ZV20	ZV24	ZV32
Total heat output	(kW)	5,04-13,84	4,00-17,1	5,08-18,22	5,08-21,96	8,57-30,48
Heat output on the water side	(kW)	3,81-10,53	3,10-13,40	4,20-13,98	4,2-17,86	6,51-24,38
Heat output on surrounding area	(kW)	1,23-3,31	0,90-3,70	0,88-4,24	0,88-4,1	2,06-6,05
Pellet consumption	(kg/h)	1,07-3,02	0,84-3,71	1,11-4,02	1,11-4,89	1,82-6,6
Efficiency	(%)	93-96	97,5-95	96,71-95,74	96,71-94,98	95,79-94,03
Flue gas tube diameter	Ø (mm)	80	80	80	80	100
Pellet tank volume	(kg)	17	30	42	42	57
Air supply connection	Ø (mm)	50	50	50	50	60
Stove water content	(lit.)	17	31	50	50	60
Power consumption	(W)	100-310	110-320	140-350	140-350	140-350
Noise level (min-max)	(dB)	31-48	31-48	31-48	31-48	31-48
Dimensions (AxBxC)	(mm)	434x605x1003	520x630x1115	615x675x1270	615x675x1270	672x722x1384
Mass	(kg)	130	160	230	230	280

CentroPelet ZVB

Compact hot water pellet boiler

CentroPelet ZVB compact hot water boilers are fired with wood pellets. They are intended for hot water heating from the smallest to medium-sized buildings. They are steel constructions, modern design and high efficiency.

A burner for burning wood pellets is installed in the boiler with automatic ignition function and digital boiler controller which operates with flue gas fan according to the flue and boiler water temperature.

Supplied with built-in pump, safety valve, air vent, pressure switch and expansion vessel.

The pellet tank is an integral part of the boiler.



WOOD PELLETS



BOILER CLASS 5

WiFi

ECODESIGN APPROVED ErP

Characteristics of CentroPelet ZVB boilers

- CentroPelet ZVB hot water boiler for central heating with built-in pellet burner, nominal power 14-29 kW.
- The CentroPelet is supplied with pellets using a screw conveyor and ignites them using an electric heater.
- Automatic switching on/off of the boiler is possible.
- High boiler efficiency.
- Low emissions of harmful compounds in flue gases.
- Possibility to set timers.
- The compact design allows the boiler to be placed in small boiler rooms.
- Factory-installed circulation pump, safety valve, pressure switch, expansion vessel and automatic air vent.
- Integrated pellet tank.



Boiler cross section



Boiler controller (can be installed on the left or right side of the boiler)



Mechanism for turbulator cleaning, boiler controller



Burning chamber



Pellet tank





Delivery, obligatory and optional accessories

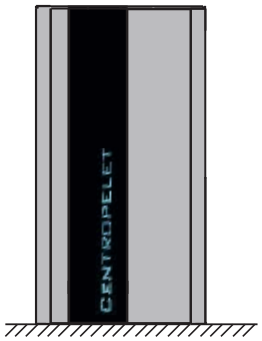

Delivery

– Boiler with controller in cardboard packaging

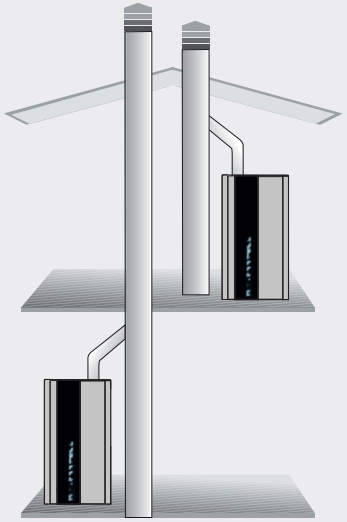

Flue gas exhaust

– One boiler on one chimney



Flue gas exhaust

– External flue pipes that must be connected according to local regulations

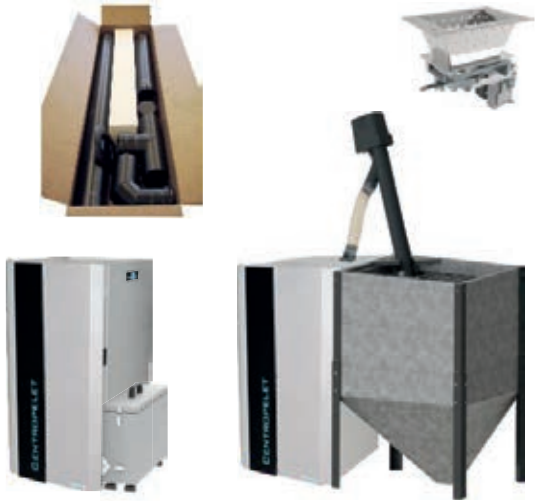

Additional equipment

– Chimney flue connection set
  Ø 80 - for ZVB 16-24
  Ø 100 - for ZVB 32

– Flue pipe 1 m, flue pipe 0,5 m, T-piece cover, T-piece, silicone rosette, elbow 90°, flue pipe 0,25 m, elbow 45°

– Automatic cleaning of the grate, automatic ash extraction - Only by special order of the boiler

– Automatic refilling of pellets from a larger tank

Basic dimensions

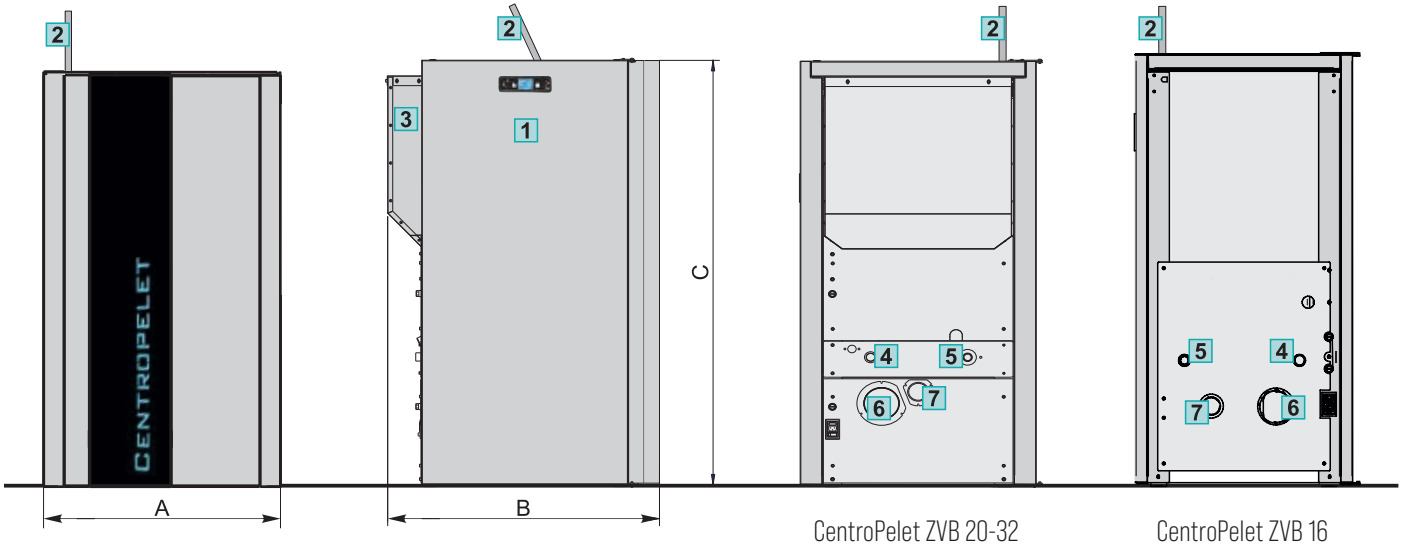

CentroPelet ZVB		16	20	24	32
Heat output range	(kW)	4,29-14,4	5,21-17,51	5,21-21,51	6,34-29,14
Pellet consumption	(kg/h)	1,02-3,37	1,2-3,88	1,2-4,85	1,43-6,48
Efficiency	(%)	89,11-87,87	88,82-92,13	88,82-90,39	90,65-91,64
Flue gas tube diameter	Ø (mm)	80	80	80	100
Pellet tank volume	(kg)	30	65	65	85
Boiler water content	(lit.)	31	50	50	60
Autonomy	(h)	29,5-9	54-16,5	54-13,5	38,5-12,5
Power consumption	(W)	140-350	100-300	100-300	100-300
Dimensions (AxBxC)	(mm)	562x700x1081	610x785x1240	610x785x1240	670x870x1360
Boiler mass	(kg)	180	250	250	305
Energy efficiency class		A+	A+	A+	A+

1 Controller
2 Flue passage cleaning mechanism
3 Pellet tank
4 Main flow
5 Return flow
6 Flue gas outlet connection
7 Fresh air supply connection

ZVB II

Compact hot water boiler

ZVB II are compact wood pellet boilers, ideal for radiator, floor and fan coil heating in small and medium-sized buildings. They are made of steel, modern design and high efficiency.

The built-in burner with automatic ignition and turbulators with manual cleaning ensure optimal combustion. The digital controller with a 7" screen manages the operation according to the temperature of the smoke and boiler water and allows the control of up to 3 pumps and 1 mixing valve.

The boiler comes with a pump, safety valve, air vent, pressure switch and expansion vessel.

The pellet tank is part of the boiler, with the possibility of expansion with additional equipment.



WOOD PELLETS



BOILER CLASS 5

Wi Fi

ECODESIGN APPROVED ErP

Characteristics of ZVB II boilers

- ZVB II hot water central heating boiler with built-in pellet burner and turbulators with manual cleaning (which ensure optimal pellet combustion), power 14–21 kW.
- Advanced digital controller with 7" touch screen controls the boiler, heating circuits and sanitary water (up to 3 pumps and 1 mixing valve).
- Automatic boiler start/stop possible.
- High boiler efficiency.
- Low emissions of harmful compounds in flue gases.
- Compact design allows the boiler to be placed in small or medium-sized boiler rooms.
- Possibility of expansion with additional equipment: fuel level sensor, larger tank with screw conveyor, module for additional circuits, room correctors or thermostats.
- Integrated pellet tank.

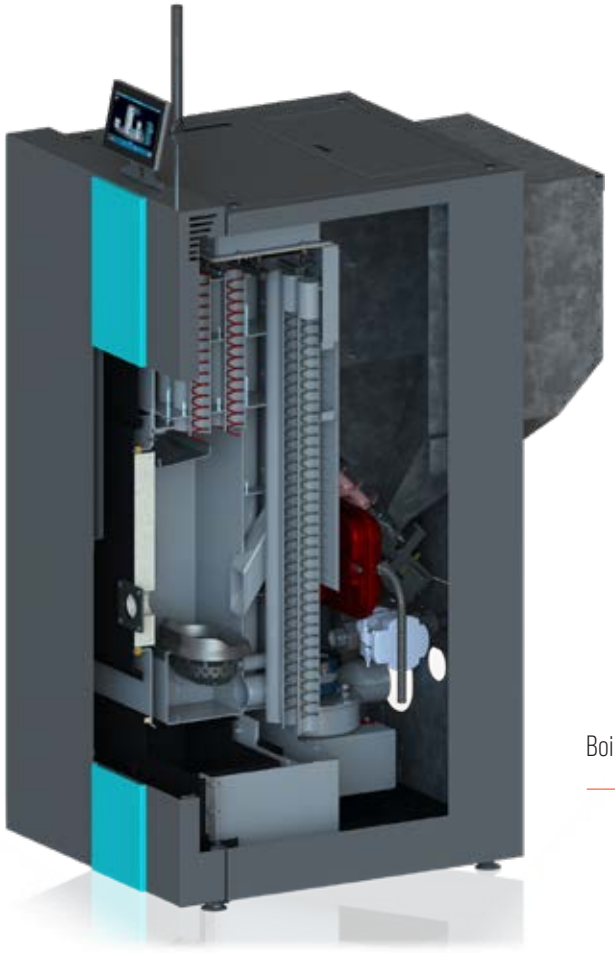

Boiler cross section



Boiler controller (7" color touch screen)



Mechanism for turbulator cleaning, boiler controller



Burning chamber



Pellet tank





Delivery, obligatory and optional accessories

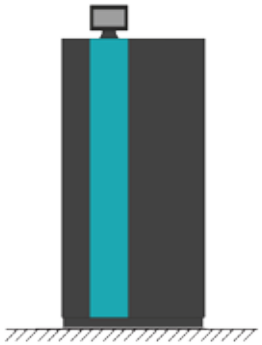

Delivery

– Hot water boiler with regulation, boiler temperature sensor and flue gas temperature sensor in cardboard packaging

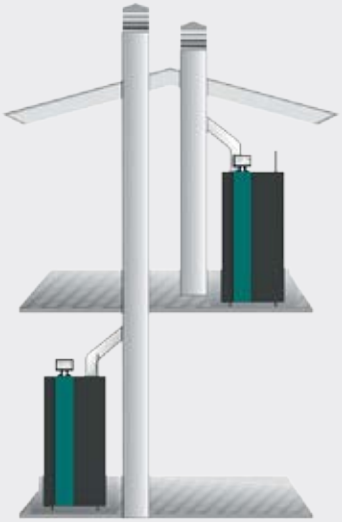

Flue gas exhaust

– One boiler on one chimney

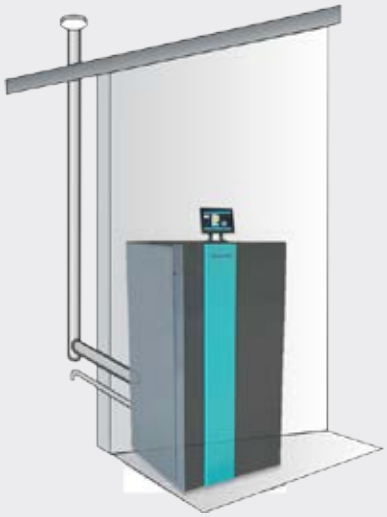

Flue gas exhaust

– External flue pipes that must be connected according to local regulations



Additional equipment

CM2K module for managing 2 heating circuits

– Allows control of up to 2 heating circuits according to the outside temperature (control of up to 2 mixing valves and up to 2 heating pumps)

– Up to 3 CM2K modules can be connected (up to 6 heating circuits)

– Up to 2 CSK/CSK-Touch room correctors can be connected per module

CSK

– Room corrector

CSK-Touch

– Room corrector with touch screen



Additional equipment

Tank refilling with a conveyor

– Tank refilling with a screw conveyor for a larger tank CPSP-BP 800

In addition to the conveyor, the additional equipment CMSR-100 is required

Basic dimensions

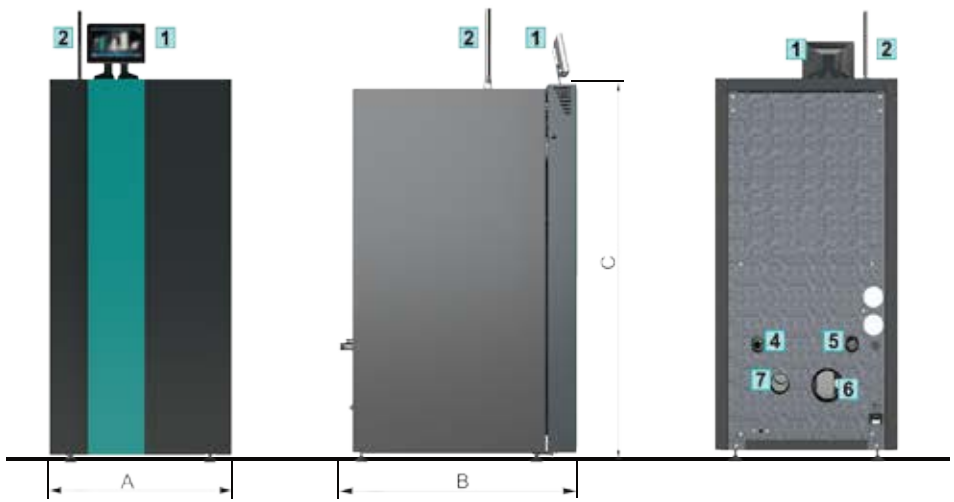

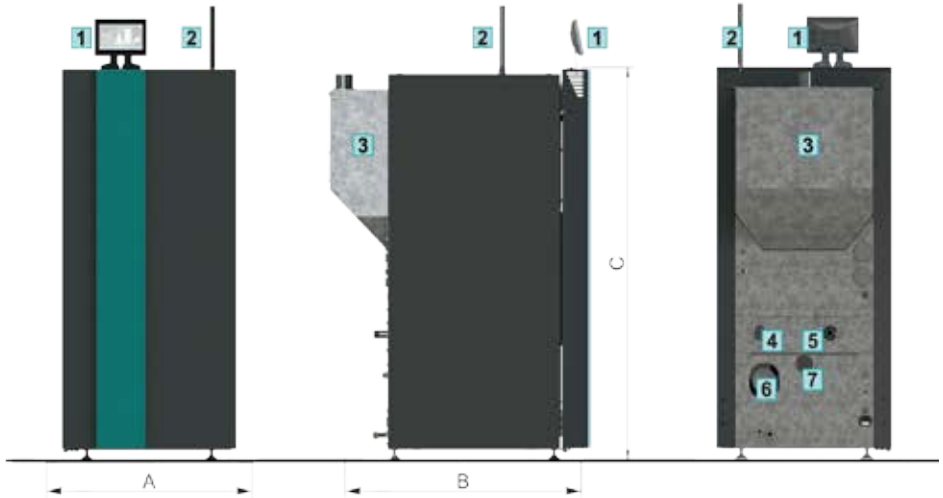

ZVB II		ZVB II 16 / ZVB 16 II -AUTO	ZVB II 20 / ZVB 20 II -AUTO	ZVB II 24 / ZVB 24 II -AUTO
Heat output range	(kW)	4,1-13,8 / 4-14,5	5,2-17,5	6,3-21,0
Pellet consumption	(kg/h)	1,02-3,37	1,2-3,88	1,2-4,85
Efficiency	(%)	84,3-91,2	82,3-92,1	85,4-91,1
Flue gas tube diameter	Ø (mm)	80	80	80
Pellet tank volume	(kg)	30	65	65
Boiler water content	(lit.)	31	50	50
Autonomy	(h)	29,5-9	54-16,5	54-13,5
Power consumption	(W)	140-350	100-300	100-300
Dimensions (AxBxC)	(mm)	560x760x1345	610x900x1495	610x900x1495
Boiler mass	(kg)	185	265	265
Energy efficiency class		A+	A+	A+

1	Controller
2	Flue passage cleaning mechanism
3	Pellet tank
4	Main flow
5	Return flow
6	Flue gas outlet connection
7	Fresh air supply connection

CentroPelet ZVBS

Hot water boilers

CentroPelet ZVBS hot water boilers are fired with wood pellets. They are intended for hot water heating from the smallest to medium-sized buildings.

They are steel construction, modern design and high efficiency. The boilers are equipped with a burner for burning wood pellets with the function of automatic ignition and digital boiler control that operates with flue gas fan according to the flue and boiler water temperature.

The pellet tank is an integral part of the boiler.



WOOD PELLETS



BOILER CLASS 5

ECODESIGN APPROVED ErP

Characteristics of CentroPelet ZVBS boilers

- CentroPelet ZVBS hot water boiler for central heating with built-in pellet burner, nominal power 25 and 35 kW.
- The boiler is supplied with pellets using a screw conveyor and ignites them using an electric heater.
- Automatic switching on/off of the boiler is possible.
- High boiler efficiency.
- Low emissions of harmful compounds in flue gases.
- Manual cleaning of the heat exchanger with the lever without opening the boiler.
- Possibility to set timers.
- The compact design allows the boiler to be placed in small boiler rooms.
- Integrated pellet tank.

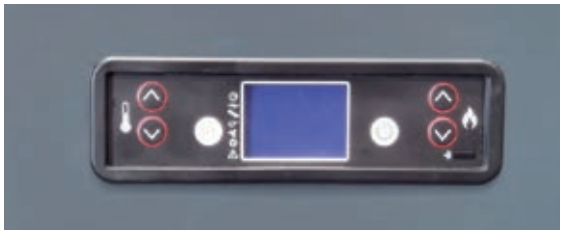

Boiler controller (can be installed on the left or right side of the boiler)



Ashtray

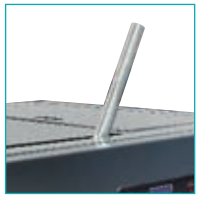

Cleaning handle



Pellet tank

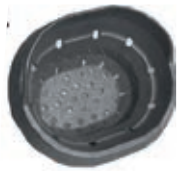

Burning chamber grate (ZVBS 25)



Burning chamber grate (ZVBS 35)





Delivery and accessories



Delivery

– Boiler with controller, in cardboard packaging

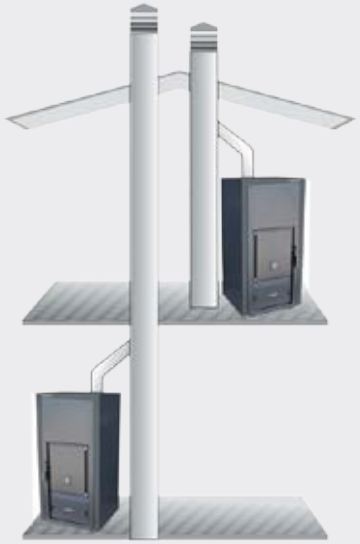

Flue gas exhaust

– One boiler on one chimney



Flue gas exhaust

– External flue pipes that must be connected according to local regulations



Additional equipment

– Flue set for chimney connection
  Ø 80 - for ZVBS 25
  Ø 100 - for ZVBS 35

– Flue pipe 1 m, flue pipe 0.5 m, T-piece cover, T-piece, silicone rosette, elbow 90°, flue pipe 0.25 m, elbow 45°)

Basic dimensions

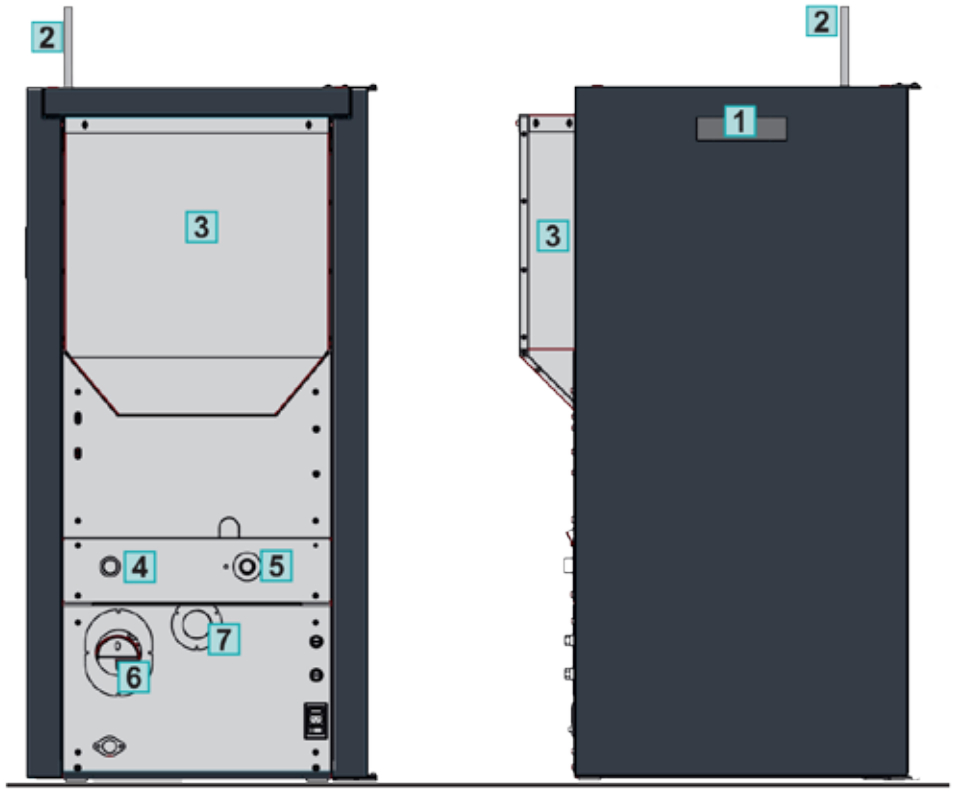

CentroPelet ZVBS		25	35
Heat output range	(kW)	5,21-21,51	6,34-29,14
Pellet consumption	(kg/h)	1,2-4,85	1,43-6,48
Efficiency	(%)	88,82-90,39	90,65-91,64
Flue gas tube diameter	Ø (mm)	80	100
Pellet tank volume	(kg)	70	95
Boiler water content	(lit.)	50	60
Autonomy	(h)	54-13,5	38,5-12,5
Power consumption	(W)	100-300	100-300
Dimensions(WxDxH)	(mm)	624x775x1249	688x831x1599
Boiler mass	(kg)	250	305
Energy efficiency class		A+	A+

1	Controller
2	Flue passage cleaning mechanism
3	Pellet tank
4	Main flow
5	Return flow
6	Flue gas outlet connection
7	Fresh air supply connection

PelTec-Compact

Pellet hot water boiler

PelTec-Compact is designed for wood pellet burning. The built-in lambda probe with modulating fan ensures optimal combustion and high efficiency, while automatic cleaning of the flue passages and burner grate enables reliable operation even with lower quality pellets.

Digital controller with 7'' touch screen controls one mixing heating circuit and domestic water heating. Built-in hydraulic diverter with return line protection, compact dimensions and factory-installed equipment such as a vacuum turbine make installation easy and provide high comfort.

The boiler includes safety elements, an expansion vessel and the ability to control via a web portal (factory-installed WiFi chip).



WOOD PELLETS



BOILER CLASS 5

WiFi

ECODESIGN APPROVED ErP

Characteristics of PelTec-Compact boilers

- Boiler class 5, Ecodesign.
- PelTec-Compact hot water central heating boiler with built-in pellet burner, power 12, 18 and 24 kW.
- High boiler efficiency and low maintenance requirements.
- Low emissions of harmful compounds in flue gases.
- Automatic cleaning of the burner grate and flue passages.
- Built-in lambda probe with modulating fan enables optimal combustion and a high degree of boiler efficiency.
- Flue gas temperature sensor and pellet level sensor in the pellet tank.
  Integrated return line protection with 3-way electromotive mixing valve for direct heating systems and via an accumulation tank (in systems with multiple heating circuits, a hydraulic diverter or accumulation tank is required).
- The boiler is equipped with a multifunctional digital controller with a 7'' touch screen and a built-in WiFi chip for easy operation.
- The boiler includes a hydraulic diverter, vacuum turbine, expansion vessel and safety elements for maximum safety and reliability.
- Additional equipment: CM2K module for controlling 2 or more heating circuits, CSK and CSK-Touch room correctors, CAL alarm set, CMNET module for cascade control of boilers, CVDOP cyclone for dust removal from the pellet supply system, CPSP-BP 800 additional pellet tank with conveyor.
- Internet monitoring and control of the boiler allows access via smartphone, tablet or computer, with an intuitive graphical interface (standard delivery).
- The boilers are tested and certified according to the EN303-5 standard and meet class 5 and are manufactured in accordance with the ISO 9001 and ISO 14001 standards.



Boiler cross section

Multifunctional digital controller with a 7" touch screen





Delivery, obligatory and optional accessories



Delivery

– Boiler with casing and thermal insulation, with built-in and wired: 7” controller, flue gas temperature sensor, return line and pellet level sensor, safety thermostat, pressure switch, photocell, lambda probe, flue gas fan, dosing valve, pump group, grate cleaning mechanism, cleaning accessories (rake, brush, rake, accessory holder), hydraulic diverter, vacuum booster, expansion tank, vent and safety valve.

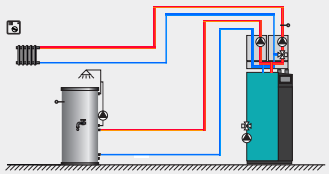

Connection to a system with one outdoor temperature-controlled mixing heating circuit and domestic hot water (DHW) preparation

– Pump groups: direct for DHW + with mixing valve for heating circuit

– Room corrector/thermostat

– DHW tank (TB, STB...)

* One of 45 possible connection diagrams is shown

** Boiler pump group (pump + 3-way mixing valve), safety valve, air vent and expansion vessel are part of the boiler delivery



Additional equipment

CAL alarm set (speaker/lamp)

– Boiler error or warning signaling module with sound or light about boiler operation

CMNET

– Cascade module for control up to 8 boilers in cascade



Additional equipment

CM2K control module for 2 heating circuits

– Control up to 2 heating circuits according to outdoor temperature (control up to 2 mixing valves and up to 2 heating pumps)

– Up to 3 CM2K modules can be connected (up to 6 heating circuits)

– Up to 2 room correctors CSK / CSK-Touch per module can be connected

CSK

– Room corrector



Additional equipment

CSK-Touch

– Room corrector with touch screen

CVDOP

– Cyclone vacuum refills for dust removal

Basic dimensions

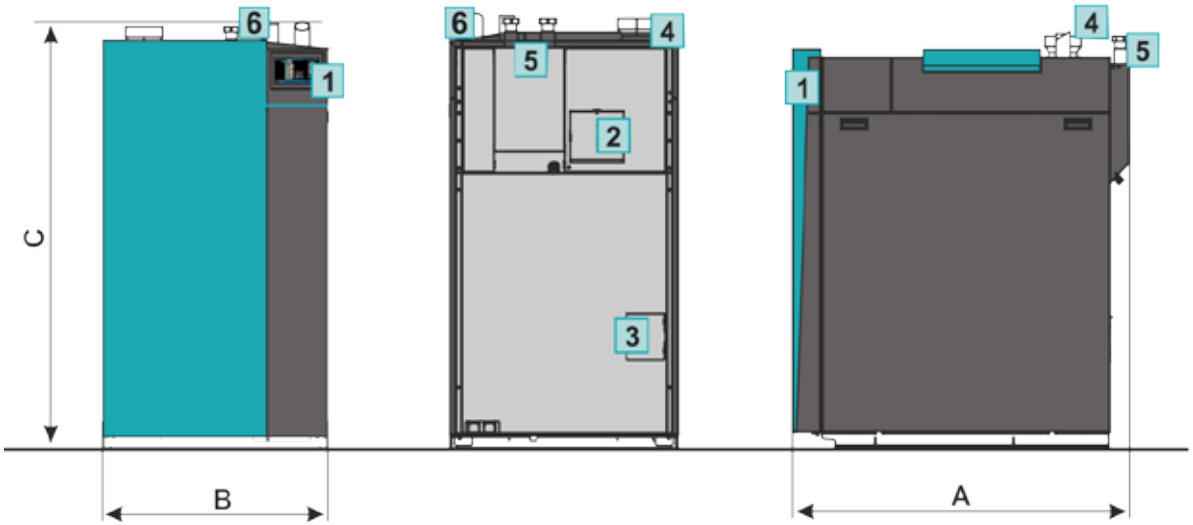

1	Boiler control
2	Flue chamber cleaning cover
3	Fresh air combustion opening
4	Flue connection
5	Boiler water flow/return
6	Vacuum supply pipes

PelTec-Compact		12	18	24
Heat output	(kW)	12	18	24
Heat output range	(kW)	3,6-12	5,4-18	7,2-24
Flue gas tube-outer diameter*	Ø (mm)	100	130	130
Main flow/Return flow	(R)	6/4"	6/4"	6/4"
Filling/Draining	(R)	1/2"	1/2"	1/2"
Maximum operating temperature	(°C)	90	90	90
Boiler water content	(lit.)	61	91	91
Maximum operating overpressure	(bar)	3	3	3
Pellet tank volume	(lit.)	48	48	48
Total depth (A)	(mm.)	1135	1205	1205
Total width (B)	(mm.)	680	780	780
Total height (C)	(mm.)	1430	1430	1430
Boiler mass	(kg)	380	440	440
Energy efficiency class		A+	A+	A+

* The inner diameter of the chimney is determined according to the power of the boiler and the height of the chimney and must almost always be larger than the diameter of the flue gas tube

PelTec II Lambda 12-48

Pellet hot water boiler

The **PelTec II Lambda** steel hot water boiler is intended for wood pellets firing. The boiler has a built-in burner for burning wood pellets with the function of automatic ignition and self-cleaning of the grate and flue passages, while factory-installed lambda probe optimizes combustion, which enables reliable operation with pellets of poorer quality.

The function of automatic cleaning of flue pipes ensures uniform heat exchange and a high and uniform degree boiler efficiency.

Multifunctional digital boiler controller with 7'' touch screen in the basic version offers the possibility of modulating boiler operation and control of the pellet level in the tank. By logging in to the web portal, you can control the boiler and heating system via mobile phone or computer. Integrated boiler return line protection ensures flawless boiler operation even at lower return temperatures. The pellet tank is part of the boiler. The boiler is delivered with casing while the pellet tank is in parts for easier entry into the boiler room.



WOOD PELLETS



PelTec II Lambda 12



PelTec II Lambda 18



PelTec II Lambda 24-48

BOILER CLASS 5

WiFi

ECODESIGN APPROVED ErP

PelTec II Lambda boiler characteristics

- Boiler class 5, Ecodesign.
- PelTec II Lambda hot water central heating boiler for wood pellets with built-in lambda probe, power 12, 18, 24, 36 and 48 kW.
- Low emissions of harmful compounds in flue gases.
- Modulating boiler operation (30 % - 100 %).
- Automatic cleaning of the burner grate and flue passages.
- Flue gas temperature sensor and pellet level sensor in the pellet tank.
- Integrated return line protection with 4-way electromotor mixing valve.
- The boiler is equipped with a multifunctional digital controller with a 7'' touch screen and built-in WiFi chip for easy control.
- Emptying the ash box after 2-3 tanks (400-600 kg) of pellets have been used.
- Additional equipment: CM2K module for controlling 2 (maximum 6) heating circuits according to the outdoor temperature, CSK/CSK-Touch room corrector, Vacuum automatic refilling of the pellet tank, CMNET cascade manager, CAL sound or light warning or error signal, RSE rotary protection against flame return...
- The boilers are tested and certified according to the EN303-5 standard and meet class 5 and are manufactured in accordance with the ISO 9001 and ISO14001 standards.



Boiler cross section

Multifunctional digital controller with a 7" touch screen





Delivery, obligatory and optional accessorie



Delivery

- Boiler with casing and regulation, wired, with lambda probe and 3 additional sensors, 7'' touch screen, dosing valve, pump group with motor-driven pump and mixing valve, flue gas fan, grate cleaning mechanism, cleaning accessories (rake, brush, rake, accessory holder).
- Pellet tank in cardboard packaging + pellet transporter

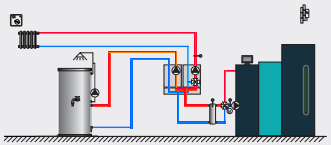

Connection to a system with one outdoor temperature-controlled mixing heating circuit and domestic hot water (DHW) preparation

- Pumps: direct for DHW + with mixing valve for the heating circuit
- Room corrector/thermostat
- DHW tank (TB, STB...)

* One of 45 possible connection diagrams is shown

** Pump group (part of the boiler delivery)

Closed heating system

- Safety airvent group (2,5 bar) and expansion vessel;

Open heating system

- Open expansion vessel



Additional equipment

RSE

- Rotational flame back protection

CAL alarm set (speaker / lamp)

- Boiler error or warning signaling module with sound or light about boiler operation

CMNET

- Cascade module for control up to 8 boilers in cascade



Additional equipment

CM2K control module for 2 heating circuits

- Control up to 2 heating circuits according to outdoor temperature (control up to 2 mixing valves and up to 2 heating pumps)
- Up to 3 CM2K modules can be connected (up to 6 heating circuits)
- Up to 2 room correctors CSK/CSK-Touch per module can be connected

CSK

- Room corrector

CSK-Touch

- Room corrector with touch screen



Additional equipment

Pellet vacuum suction system CVT

- Vacuum suction system with mole from the pellet storage
- Vacuum suction system from a large pellet tank (Centropelet box)
- Vacuum suction system by conveyor from the pellet storage
- Max.10 m long flex. pipes (in one direction) from pellet storage
- For DINplus or ENplus A1 pellets only

CVDOP

- Cyclone for pellet vacuum suction system to remove dust from pellets



Additional equipment

Pellet tank extension

- Increase the volume of pellet tank by +77 kg
- Extension height h=300 mm

CPSP-BP 800

- Refill the tank with a screw transporter from larger tank CPSP-BP 800

Basic dimensions

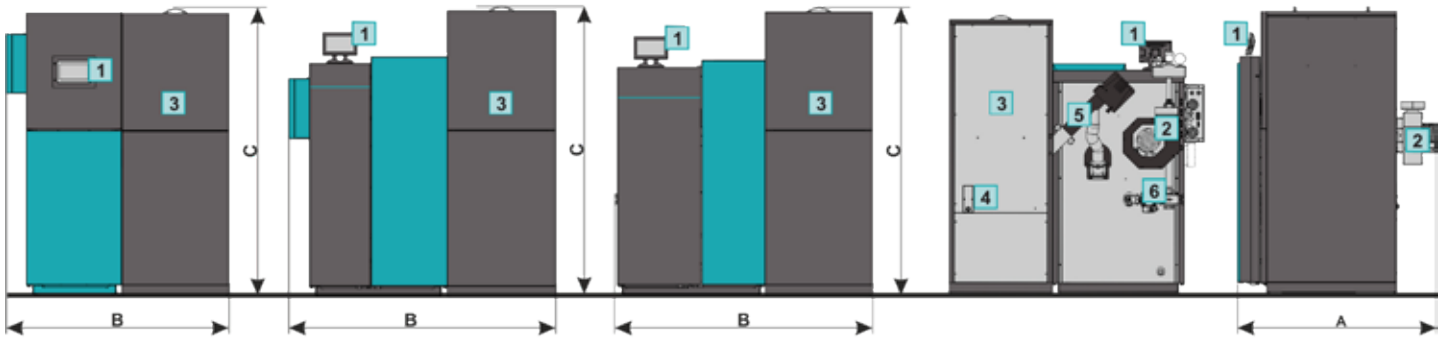

PelTec II Lambda 12 PelTec II Lambda 18 PelTec II Lambda 24-48

1	Boiler controller
2	Flue gas fan
3	Pellet tank
4	Pellet level sensor in the tank
5	Screw transporter
6	Pump group with pump and 4-way mixing valve with actuator

PelTec II Lambda		12	18	24	36	48
Heat output	(kW)	12	18	24	36	48
Heat output range	(kW)	3,6-12	5,4-18	7,2-24	10,8-36	14,4-48
Flue gas tube-outer diameter*	Ø (mm)	130	130	130	150	150
Fresh air connection-outer diameter	Ø (mm)	80	80	80	80	80
Main flow/Return flow	(R)	5/4"	5/4"	5/4"	5/4"	5/4"
Filling/Draining	(R)	1/2"	1/2"	1/2"	1/2"	1/2"
Maximum operating temperature	(°C)	90	90	90	90	90
Boiler water content	(lit.)	78	76	100	108	135
Maximum operating overpressure	(bar)	2,5	2,5	2,5	2,5	2,5
Pellet tank volume	(lit.)	340	340	340	340	340
Total depth (A)	(mm)	1100	1090	1050	1150	1150
Total width (B)	(mm)	1210	1435	1380	1465	1465
Total height (C)	(mm)	1560	1560	1560	1560	1560
Depth for entering the boiler room	(mm)	760	760	740	840	840
Width for entering the boiler room	(mm)	660	880	855	945	945
Height for entering the boiler room	(mm)	1560	1290	1270	1270	1420
Boiler mass	(kg)	328	349	402	455	478
Energy efficiency class		A+	A+	A+	A+	A+

* The inner diameter of the chimney is determined according to the power of the boiler and the height of the chimney and must almost always be larger than the diameter of the flue gas tube

PelTec II Lambda 69/96

PelTec II Lambda 69

PelTec II Lambda 96

Pellet hot water boiler

The **PelTec II Lambda 69/96** steel hot water boiler is intended for burning wood pellets. The boiler has a built-in burner for burning wood pellets with the function of automatic ignition and self cleaning of the grate and flue passages, while factory-installed lambda probe optimizes combustion, which enables reliable operation even with pellets of poorer quality.

The function of automatic cleaning of flue pipes ensures uniform heat exchange and a high and uniform degree of boiler efficiency. Multifunctional digital boiler controller with a 7'' touch screen in the basic version has the ability to modulate the boiler operation and control the pellet level in the tank. The screen has a standard built-in WiFi chip that allows the boiler to be connected to a web portal that can be used to manage the boiler and heating system.

Integrated boiler return flow protection ensures flawless operation of the boiler even at lower return temperatures.

The pellet tank is an integral part of the boiler. The boiler is delivered with casing while the pellet tank is in parts for easier entry into the boiler room.



WOOD PELLETS



ECODESIGN APPROVED ErP

Characteristics of PelTec II Lambda 69/96 boilers

- Boiler class 5, Ecodesign.
- Hot water boiler for central heating PelTec II Lambda with built-in pellet burner power 69 and 96 kW.
- Low emissions of harmful compounds in flue gases.
- Modulating boiler operation (30 % -100 %).
- Built-in lambda probe for combustion optimization.
- Automatic cleaning of burner grate and flue passages.
- Flue gas temperature sensor and pellet level sensor in the pellet hopper.
- Integrated return line protection with a 4-way mixing valve with a motor drive for return line protection.
- The boiler is equipped with a multifunctional digital controller with a 7'' touch screen and a built-in WiFi chip for easy control.
- Additional equipment: CM2K module for controlling 2 (maximum 6) heating circuits according to the outdoor temperature, CKS and CSK Touch room corrector, automatic pellet tank refilling, boiler operation control with an external controller, CMNET cascade manager, RSE rotary flame return protection, ash removal boxes with a volume of 68 liters.
- The boilers are tested and certified according to the EN303-5 standard and meet class 5 and are manufactured in accordance with the ISO 9001 and ISO14001 standards.



Boiler cross section

Multifunctional digital controller with a 7" touch screen





Delivery, obligatory and optional accessories

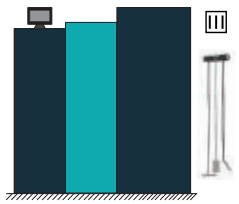

Delivery

- Boiler with casing and control, wired, pump group with motor-driven pump and mixing valve, flue gas fan, grate cleaning mechanism, cleaning accessories (rake, brush, rake, accessory holder)
- Pellet tank in cardboard packaging + pellet transporter

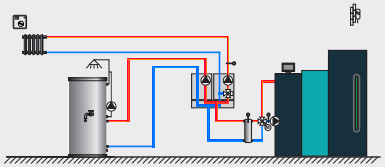

Connection to a system with one outdoor temperature-controlled mixing heating circuit and domestic hot water (DHW) preparation

- Pumps: direct for DHW + with mixing valve for heating circuit
- Room corrector/thermostat
- DHW tank (TB, STB...)

* One of 45 possible connection schemes shown

** Pump group (part of boiler delivery)

Closed heating system

- Safety airvent group (2.5 bar) and expansion vessel;

Open heating system

- Open expansion vessel



Additional equipment

RSE

- Rotary valve for burn back protection

CAL alarm set (speaker / lamp)

- Boiler error or warning signaling module with sound or light about boiler operation

CMNET

- Cascade manager for control up to 8 boilers in a cascade

Extracting ashes into containers

- Automatic extraction of ash from the boiler in 2 containers with a volume of 68 liters

CSK

- Room corrector

CPSP-BP 800

- Refill the tank with a screw transporter from larger tank CPSP-BP 800



Additional equipment

CM2K control module for 2 heating circuits

- Allows control of up to 2 heating circuits according to the outdoor temperature (control of up to 2 mixing valves and up to 2 heating pumps or up to 2 recirculation or DHW circuits)
- Up to 3 CM2K modules can be connected (up to 6 heating circuits)

CSK-Touch

- Room corrector with touch screen
- Possible basic control of the boiler
- Wireless or wired connection with the boiler or CM2K module



Additional equipment

Pellet vacuum suction system CVT

- Vacuum suction system with mole from the storage
- Vacuum suction system from a large pellet tank (Centropelet box)
- Vacuum suction system by conveyor from the pellet storage
- Max.10 m long flex. pipes (in one direction) from pellet storage
- For DINplus or ENplus A1 pellets only

CVDOP

- Cyclone for pellet vacuum suction to remove dust from pellets

Automatic ash extraction

- Significantly prolongs the autonomy of the boiler.
- Connection to existing controller.
- Two 68 liter containers with wheels for easy transport and a telescopic adjustable handle.
- Boiler accessories.



PelTec II Lambda 69/96 with built-in automatic ash extraction

Basic dimensions

PelTec II Lambda 69/96		69	96
Heat output	(kW)	69	96
Heat output range	(kW)	20,7-69	28,8-96
Flue gas tube-outer diameter*	Ø (mm)	200	200
Main flow/Return flow	(R)	6/4"	6/4"
Filling/Draining	(R)	1/2"	1/2"
Maximum operating temperature	(°C)	90	90
Boiler water content	(lit.)	190	205
Maximum operating overpressure	(bar)	2,5	2,5
Pellet tank volume	(lit.)	430	430
Total depth (A)	(mm)	1220	1290
Total width (B)	(mm)	1940	1965
Total height (C)	(mm)	1590	1590
Depth for entering the boiler room	(mm)	790	865
Width for entering the boiler room	(mm)	1180	1210
Height for entering the boiler room	(mm)	1480	1480
Boiler mass	(kg)	740	835
Energy efficiency class		A+	A+

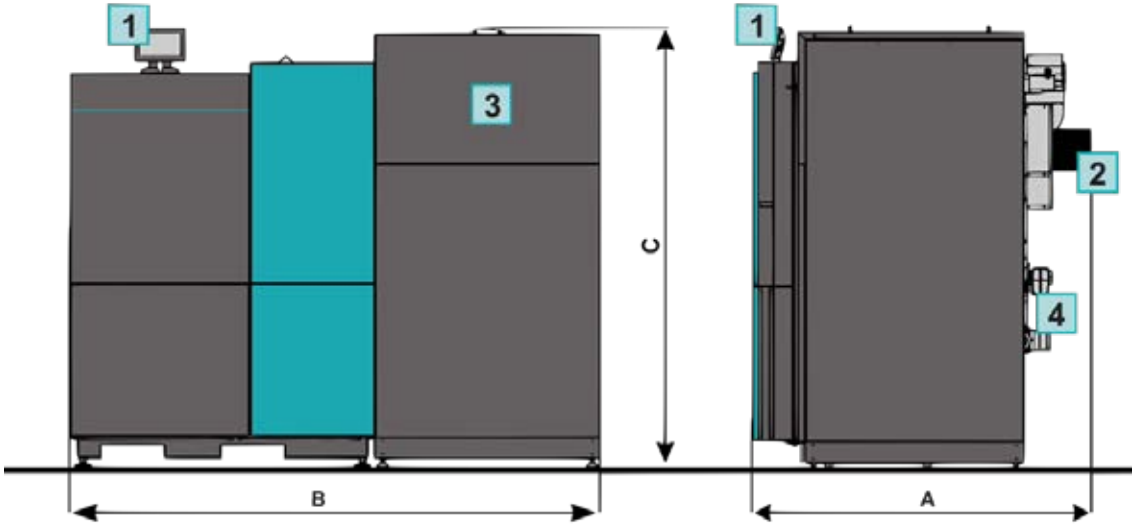

1	Boiler controller
2	Flue gas fan
3	Pellet tank
4	Pump group with pump and 4-way mixing valve with actuator

* The inner diameter of the chimney is determined according to the power of the boiler and the height of the chimney and must almost always be larger than the diameter of the flue gas tube

Cm Pelet-set Touch

Pellet heating equipment

Central heating equipment **Cm Pelet-set Touch** is intended for installation on new or previously installed hot water boilers EKO-CK P and EKO-CKB P rated heat output from 20 to 110 kW.

A special feature of the "Touch" model is the digital controller with a color touch screen. Cm Pelet-set Touch and hot water boiler form one functional unit, a "mini plant" designed for burning wood pellets.

The automatic operation of these "mini plants" provides the user with enviable comfort and makes the plants suitable for a wide range of applications.

It is made in accordance with EN 303-5 and ISO 9001. From the point of view of functionality, these plants do not lag behind oil or gas heating systems.

Pellets are renewable energy sources and are an environmentally friendly fuel.



WOOD PELLETS



Wi Fi READY

BOILER CLASS 5

ECODESIGN APPROVED ErP

Characteristics of equipment Cm Pelet set-Touch

- Prepared for installation on new or already installed hot water boilers EKO-CK P and EKO-CKB P with a rated heat output of 20 to 110 kW
- With the hot water boiler, it forms one functional unit, a "mini plant" designed for burning pellets.
- The operation of the "mini plant" is controlled by a multifunctional digital controller with a color touch screen. The controller can control the boiler and max. 5 pumps and 2 actuators for mixing valves (e.g. boiler/buffer tank or hydraulic crossover or 4-way mixing valve with actuator/DHW with or without recirculation/2 heating circuits with actuator operated via outdoor temperature or 2 direct heating circuits).
- The "mini plant" can be connected directly to the heating system via a 4-way mixing valve with motor drive or via a hydraulic diverter (with/without sensor) or via an accumulation tank with a minimum volume of 10 liters/kW.
- The fan and electric heater located in the burner, controlled by controller, automatically ignite the pellets and maintain the flame.
- Cleaning, depending on the power of the boiler and the quality of the pellets, after one spent tank (200/400 kg) for five minutes.
- The pellet tank (volume 370/800 liters) is an integral part of the plant and is filled as needed from above.
- Possibility of installing a fuel level sensor in the pellet tank.
- Possibility of upgrading the equipment with vacuum suction system for automatic supply of pellets from a larger tank to a distance of flexible pipe up to 10 meters and a lifting height of up to 4 meters, exclusively for ENplus A1 and DINplus pellets.
- Possibility of adding a flap to the burner fan to prevent air flow through the boiler at a time when the burner is not running.
- Possibility of upgrading air cleaning of burner, possibility of connecting several units in a cascade and possibility of installing additional modules for controlling up to 8 heating circuits with actuator via outdoor temperature and monitoring of boiler operation via CM-WiFi box.
- It is delivered in several parts, so it is easy to transport and bring into the space provided for installation.



Pellet controller CPREG-Touch



Pellet controller CPREG-Touch and pellet transporter CPPT



Pellet burner CPPL



Pellet tank CPSP



Pellet tank cleaning openings





Basic parts and accessories

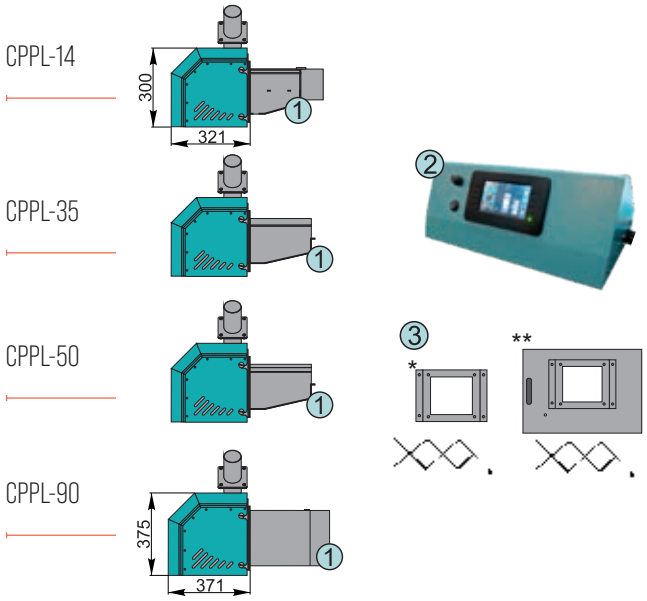

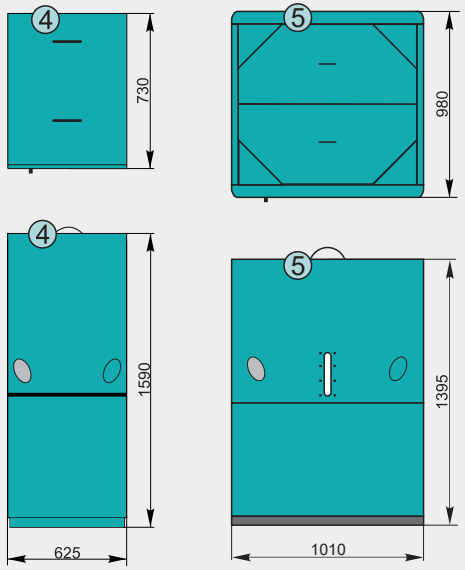

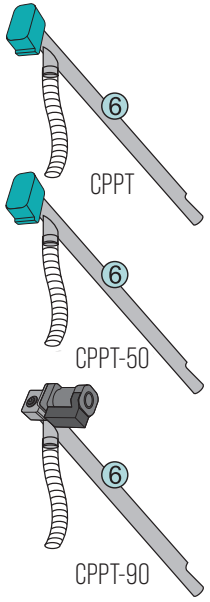

Basic parts

1	Pellet burner
2	Digital controller
3	Pellet burner installation set* or lower boiler door for pellet burner** with turbulators
4	Pellet tank CPSP
5	Pellet tank CPSP-800
6	Pellet transporter

* New boiler models (pellet burner extension added to existing lower boiler doors)

** Old boiler models (lower boiler door is changed)

Accessories

7	CM WiFi-box - allows internet monitoring and control of the boiler
8	CM2K module - allows control of up to 2 heating circuits according to outdoor temperature
9	Burner air cleaning (using compressed air)
10	Vacuum pellet suction system CVT
11	CMNET - cascade manager (up to 8 boilers)
12	Pellet level sensor
13	CSK
14	CSK-Touch



Basic dimensions

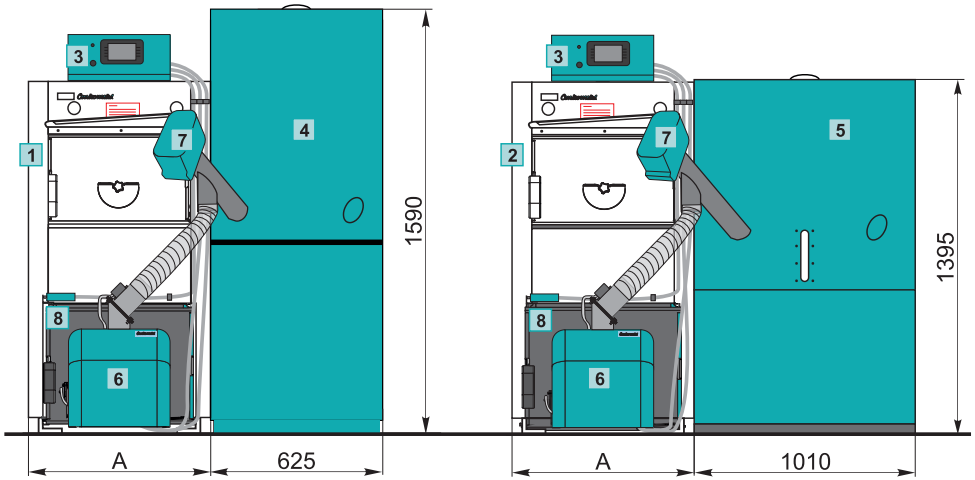

Cm Pelet-set 14-50

Cm Pelet-set 51-90

1	Boiler (EKO-CK P, EKO-CKB P)
2	Boiler (EKO-CK P 70,90,110)
3	CPREG-Touch digital controller
4	Pellet tank CPSP
5	Pellet tank CPSP 800
6	Pellet burner CPPL
7	Pellet transporter CPPT
8	Pellet burner installation set / lower boiler door

Cm Pelet-set Touch		14	20	25	30	35	40	50	60	70	90
Burner type	(-)	CPPL-14	CPPL-35	CPPL-35	CPPL-35	CPPL-35	CPPL-50	CPPL-50	CPPL-90	CPPL-90	CPPL-90
Set heat output (Cm pelet-set Touch + boiler)	(kW)	14	20	25	30	35	40	50	60	70	90
Boiler type - EKO-CK/EKO-CKB P	(-)	20	25	30	35	40	50	60	70	90	110
Pellet tank volume CPSP	(lit.)	370	370	370	370	370	370	370	-	-	-
Pellet tank volume CPSP-800	(lit.)	800	800	800	800	800	800	800	800	800	800
Power connection	(V/Hz)	230/50	230/50	230/50	230/50	230/50	230/50	230/50	230/50	230/50	230/50
Boiler width (A)	(mm)	470	470	520	570	620	620	620	640	690	690
Pellet burner installation set*	(mm)	14/25	14/25	14/25	30/35	30/35	40/50	40/50	60	70	90/100
Lower boiler door ** (old models only)	(mm)	CPDV 14-25	CPDV 14-25	CPDV 14-25	CPDV 30	CPDV 35	CPDV 40-50	CPDV 40-50	CPDV 50-60	CPDV 60-70	CPDV 90-110

EKO-CKS P Unit

Pellet hot water boiler

The hot water boiler for central heating **EKO-CKS P UNIT** is intended for burning wood pellets and consists of the boiler body EKO-CKS P in steel welded design and equipment for burning wood pellets Cm Pelet-set 200-600 kW.

The EKO-CKS P UNIT boiler needs to be upgraded with a pellet tank (e.g. CentroPelet box). EKO-CKS P UNIT 560 unit is delivered as standard with a cyclone and a fan. The burner is equipped as standard with automatic air cleaning of the grate, while the boiler can be additionally equipped with equipment for automatic ash extraction and air cleaning of flue passages in the boiler.

The operation of the burner (boiler), pellet transporter and additional equipment is controlled by digital controller, and all the listed parts together form one functional unit.



WOOD PELLETS



BOILER CLASS 5

Wi Fi READY

ECODESIGN APPROVED ErP

Characteristics of boilers EKO-CKS P Unit

- Boiler class 5, Ecodesign.
- Steel hot water boiler with pellet burner of nominal heat output 140, 180, 230, 280, 320, 430, 499, 560 kW.
- The boiler must be connected to a storage tank (min. 10 lit/kW) or a hydraulic crossover.
- Multifunction digital controller with color touch screen.
- Additional equipment: CM2K, CSK, CSK-Touch, CAL, CM WiFi-box boiler operation monitoring system via PC, tablet or mobile phone, CMNET module for connecting boilers in a cascade of up to 8 boilers, rotational flame back-up protection (RSE), pellet supply conveyor from the seasonal tank to the CentroPelet Box, pellet supply conveyor with mixer from the seasonal tank to the CentroPelet Box, pellet silos and pellet conveyors to the CentroPelet Box tank next to the boiler.
- Boiler is intended for installation in open and closed heating systems.
- Boiler is manufactured in accordance with the European standard EN 303-5 and in accordance with the standard ISO 9001 and ISO 14001.

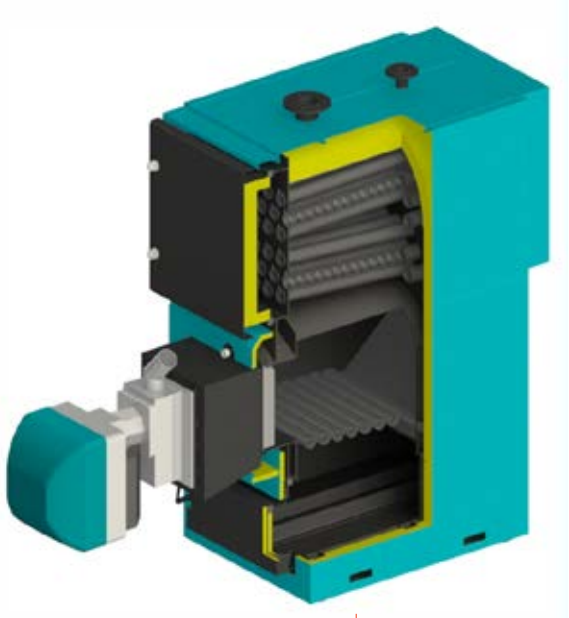

Boiler cross section



Pellet tank



Pellet burner on the boiler



Motor reducer of the pellet conveyor



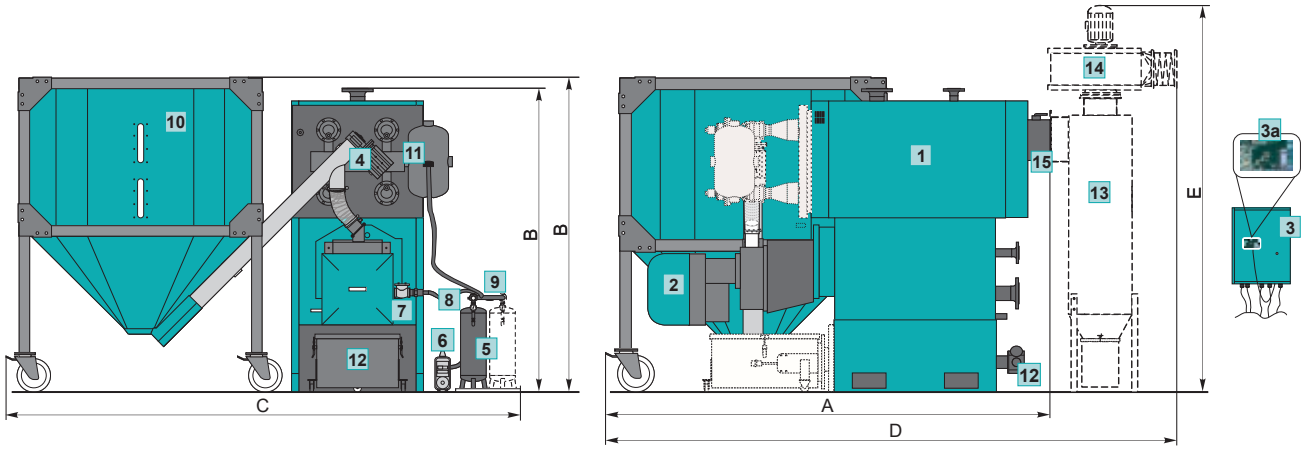

EKO-CKS P Unit		140	180	230	280	320	430	499	560
Depth (A)	(mm)	2590	2960	2960	3280	3280	3790	4420	4360
Height (B)	(mm)	1875	1875	2290	2290	2370	2555	2550	2890
Width (C)	(mm)	3300	3300	3300	3345	3420	3900	3600	4775
Depth (D)	(mm)	3300	3670	3690	4015	4105	4650	5280	5222
Height (E)	(mm)	2215	2210	2580	2585	2720	2885	2870	3258
Main flow / Back flow connections	(R)/DN	2"	2"	DN80	DN80	DN80	DN100	DN100	DN100
Energy efficiency class		A+	A+	A+	A+	A+	A+	A+	A+

1 Boiler EKO-CKS P 140-560
2 Burner CPPL 200-600
3 Electrical cabinet with controller
3a Controller with touch screen
4 Pellet transporter CPPT 200-600
5 Pressure vessel
6 Compressor
7 Solenoid valve
8 Air supply pipe
9 Air supply pipe 1
10 Pellet tank
11 Automatic boiler cleaning(additional equipment)
12 Automatic ash extraction(additional equipment)
13 Cyclone CCP
14 Fan
15 Flue gas chamber/Flue gas chamber C/V (for cyclone and fan)

	Basic delivery				Equipment packages
	Cm Pelet-set		Boiler	Output range (kW)	
EKO-CKS P Unit 140	**Cm Pelet-set 200** - pellet burner CPPL-200 inv (with automatic cleaning) - expansion vessel 50 lit. - compressor	- boiler control - pellet screw conveyor CPPT-200 - electromagnetic valve - air feeding tube	EKO-CKS P 150	42-140	
EKO-CKS P Unit 180			EKO-CKS P 200	54-180	
EKO-CKS P Unit 230	**Cm Pelet-set 300** - pellet burner CPPL-300 inv (with automatic cleaning) - expansion vessel 50 lit. - air compressor	- boiler control - pellet screw conveyor CPPT-300/350 - electromagnetic valve - air feeding tube	EKO-CKS P 250	69-230	
EKO-CKS P Unit 280			EKO-CKS P 300	84-280	
EKO-CKS P Unit 320	**Cm Pelet-set 350** - pellet burner CPPL-350 inv (with automatic cleaning) - expansion vessel 50 lit. - air compressor	- boiler control - pellet screw conveyor CPPT-300/350 - electromagnetic valve - air feeding tube	EKO-CKS P 380	96-320	
EKO-CKS P Unit 430	**Cm Pelet-set 600** - pelet burner CPPL-600 inv (with automatic cleaning) - 2 pcs of expansion vessel 50 lit. - air compressor - boiler control - pellet screw conveyor CPPT-600	- 2 pcs of electromag. valve - air feeding tube - air feeding tube 1 - cyclone, fan CVx200	EKO-CKS P 500	129-430	
EKO-CKS P Unit 499	**Cm Pelet-set 600** - pellet burner CPPL-600 inv (with automatic cleaning) - 2 pcs of expansion vessel lit. 50 lit. - air compressor - boiler control - pellet screw conveyor CPPT-600	- 2 pcs of electromag. valve - air feeding tube - air feeding tube 1 - cyclone, fan CVx200	EKO-CKS P 550	149-499	
EKO-CKS P Unit 560	**Cm Pelet-set 600** - pellet burner CPPL-600 inv (with automatic cleaning) - 2 pcs of expan. vessel lit. - air compressor - boiler control - pellet screw conveyor CPPT-600	- 2 pcs of electromag. valve - air feeding tube - air feeding tube 1 - cyclone, fan CVx200	EKO-CKS P 600	168-560	

Basic equipment in the basic delivery

- boiler with thermal insulation
- Cm Pellet-set 200-600
- pellet burner with preparation for burner air cleaning and pressure vessel
- compressor
- electrical cabinet
- boiler EKO-CKS P Unit 499 and EKO-CKS P Unit 560 are always delivered with a cyclone and a fan and an additional regulation for fan control

Mandatory equipment

- pellet transporter (CPPT- XX)
- pellet tank (CentroPelet Box) or transporter for supplying pellets to the burner from the seasonal tank
- return line protection with a 3-way mixing valve with motor drive and boiler pump
- CAS accumulation tank or hydraulic diverter
- set of safety elements for min/max boiler water pressure (mandatory for boilers larger than 300 kW according to EN 12828)

Boiler configuration with additional equipment packages

- **CIK** (cyclone with fan and additional regulation)
- **AC-K** (automatic ash removal from the firebox, automatic ash removal from the smoke box, automatic (pneumatic) cleaning of the heat exchanger flue pipes without a compressor, DHW tank management)
- **AC+K** (automatic ash removal from the firebox, automatic ash removal from the smoke box, automatic (pneumatic) cleaning of the heat exchanger flue pipes with a compressor, DHW tank management), instead of the 'Michelin compressor' from the basic delivery, a 'Kaeser compressor with compressor set' must be installed and the price of the 'Michelin compressor' must be deducted from the price calculation.

Additional equipment

- protection against backfire using a rotary metering valve (RSE) (available only in AC-K and AC+K configurations)
- CMNET - cascade manager
- CAL - alarm module
- CM2K - module for 2 heating circuits (maximum 4xCM2K modules)
- CSK - room corrector (installation possible only with CM2K module)
- CSK-Touch - digital room corrector (installation possible only with CM2K module)
- CM WiFi-box - boiler operation monitoring system via PC, tablet or smartphone
- pellet supply conveyor from seasonal tank to CentroPelet Box
- pellet supply conveyor with mixer from seasonal tank to CentroPelet Box
- pellet silos and pellet conveyors to CentroPelet Box tank next to the boiler

CPSP

CentroPelet box

Pellet tanks CPSP

CPSP pellet tanks are intended for storage of wood pellets (230, 370, 800 liters), and are installed in boiler rooms next to the boiler where it is possible to connect the tank and the pellet burner with a screw transporter. The tanks are made of powder coated sheet metal (**CPSP-H** of galvanized sheet metal).

The screw transporter is placed in the tanks at an angle of 45°, while in the CPSP-800 can also be placed from the top, at an angle of 60°. It is also possible to place two screw transporters in one tank (except in CPSP-M and CPSP-H). They are intended for manual filling (with bags) or with additional equipment, automatic filling. Tanks are delivered disassembled into components, which allows easy transport and entry into the room.

Pellet tank		CPSP-M	CPSP	CPSP-H	CPSP-800
Volume	(lit.)	230	370	390	800
Capacity	(kg)	142	250	255	520
Width (A)	(mm)	300	625	625	1010
Depth (B)	(mm)	730	730	730	980
Height (C)	(mm)	1585	1585	1585	1395
For Cm pelet-set Touch 12-50 kW		Option	**Standard** (CPSP 14-50)	Option	Option (transporter angle 45°)
For Cm pelet-set Touch 51-90 kW		x	Option (CPSP 70/90/110)	Option	**Standard** (transporter angle 45°)
For Cm pelet-set 91-560 kW		x	x	x	Option (+ set for boiler transporter EKO-CKS P Unit)

CPSP-M

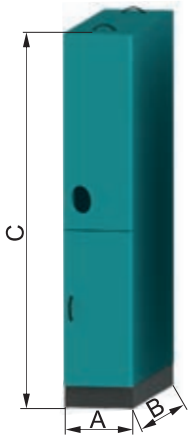

CPSP

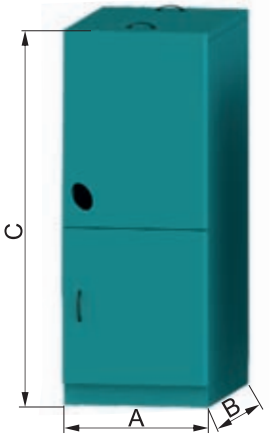

CPSP-H

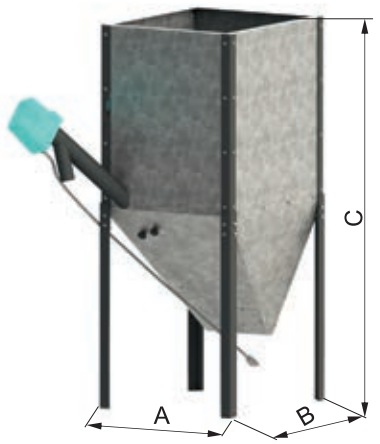

CPSP-800

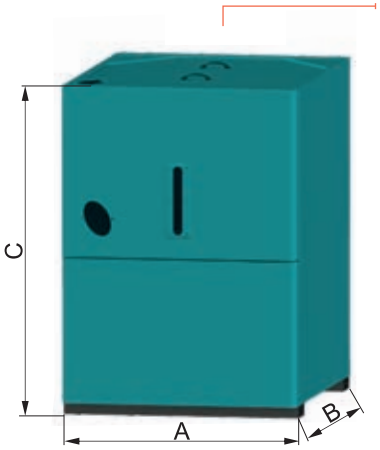

CentroPelet box pellet tanks

Pellet tanks **CentroPelet box** are intended for storage of larger quantities of wood pellets (0,8 m^3, 1,2 m^3, 2,7 m^3, 3,4 m^3, 4,0 m^3)and are installed in boiler rooms next to the boiler where it is possible to connect the tank and pellet burner with a screw transporter or as dislocated tanks from which small tanks are filled by means of screw transporters or vacuum suction systems. The tanks have galvanized sheet metal sides. A control glass opening is installed on the tank to determine the level of pellets in the tank.

The **CPSP-BP 800** tank is intended for installation next to PelTec, PelTec II Lamda, PelTec-Compact, ZVB II and BioTec Plus boilers as an additional pellet tank. The delivery of this tank includes a CentroPelet box 800 tank, a screw transporter with a supply pipe and a pellet router pipe for installation on the boiler tank.

CentroPelet box		800	1500	2700	3400	4000
Volume	(m^3)	0,8	1,2	2,7	3,4	4,0
Capacity	(t)	0,53	0,78	1,75	2,2	2,6
Width=Depth (A)	(mm)	-	1180	1645	1645	1936
WidthxDepth	(mm)	625x730	-	-	-	-
Height (C)	(mm)	1795	1795	2275	2715	2510

In the case of tanks 800, 1500, 2700, 3400 the screw transporter is placed in the holder at an angle of 45°, while in the case of tank 4000 the transporter can also be placed from top, at an angle of 60°. They are intended for manual filling (from bags or jumbo bags). Tanks are delivered disassembled into components, which allows easy transport and entry into the room.

CentroPelet box 800



CentroPelet box 1500-4000



CentroPelet box 1500-4000

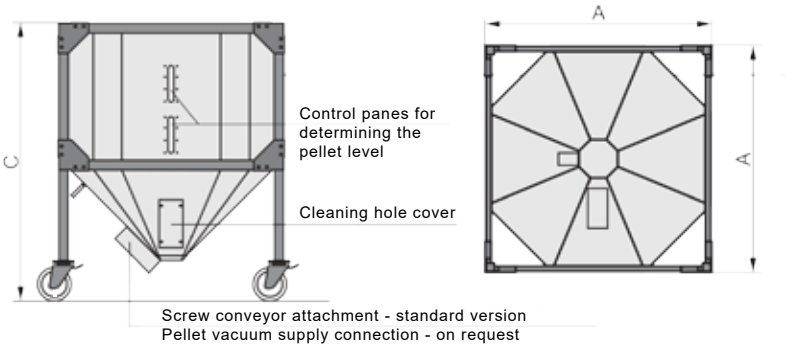

Vacuum pellet supply system

Pellet vacuum suction system



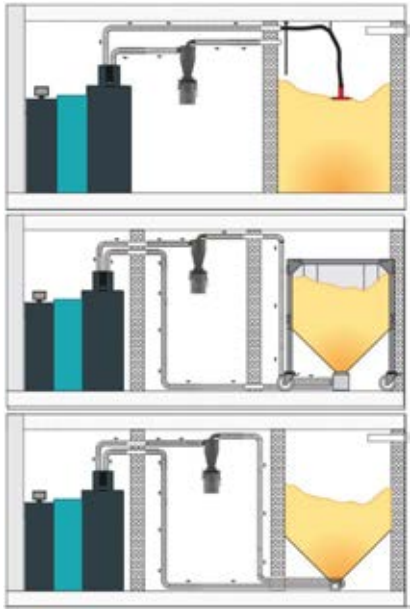

Pellet vacuum suction system is intended for pellet systems up to 96 kW where the pellet storage is not next to the boiler and its automatic supply is required. With the help of flexible pipes, maximum length up to 10 meters in one direction, the pellet is transported from a larger storage to a tank next to the boiler to ensure a continuous supply of pellets to the boiler.

The suction system can be connected to three different types of pellet storage:

- pellet storage with Mole,
- large pellet tank CentroPelet box and
- pellet storage with screw conveyor.

The system is tested for the supply of wood pellets with a diameter of 6 mm, produced according to DINplus or ENplusA1 standard, with a maximum dust content <0.7 %.

CVDOP

A vacuum suction system cyclone for dust removal is placed between the vacuum turbine and the larger storage as an accessory of the system.

EXAMPLE

Vacuum suction system with mole from pellet storage / room



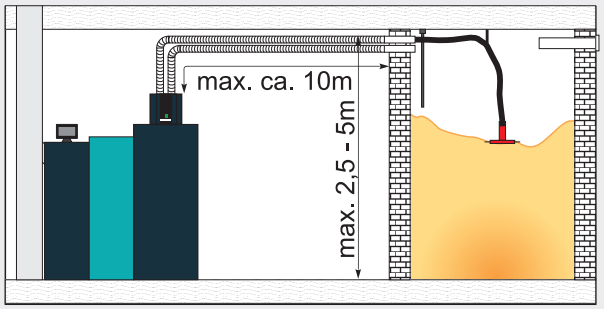

EXAMPLE

Vacuum suction system from storage pellet tank (CentroPelet box)



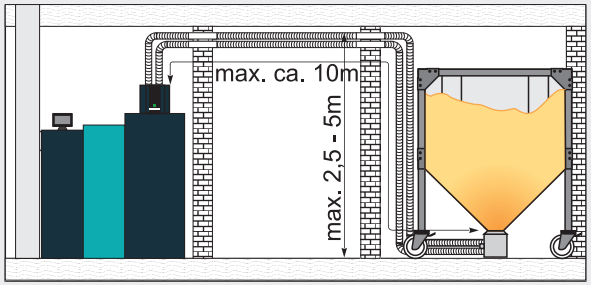

EXAMPLE

Vacuum suction system with screw conveyor from pellet storage room

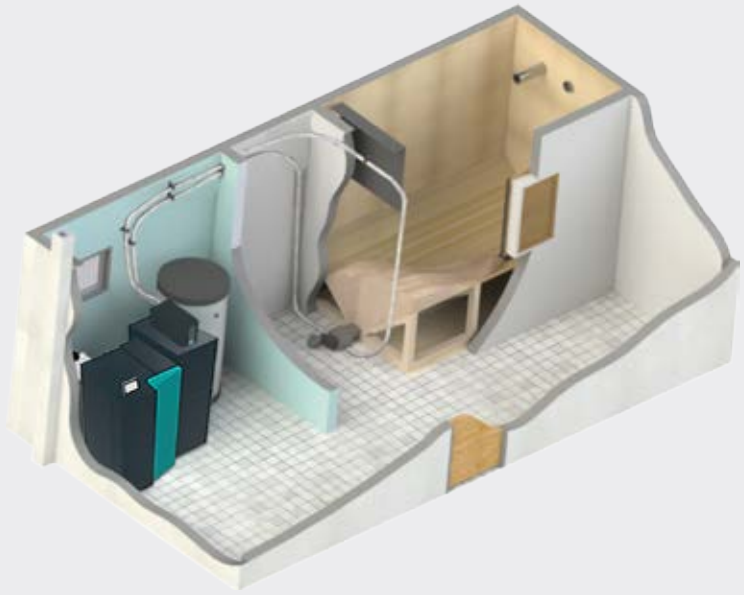

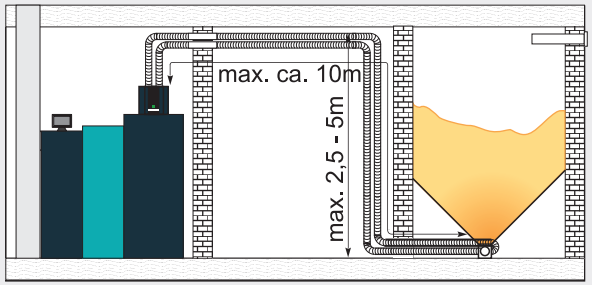

Pellet supply from the room storage using a screw transporter

Filling a smaller pellet tank from a room storage with sloping sides can be done with a screw transporter. Sloping sides in the room storage should be made at an angle of 40° to 45° to the screw transporter. Recommended room storage dimensions are from 1.5 x 2.5 m up to 4 x 8 m while larger rooms must be adapted to these dimensions. This pellet transport is intended for higher power systems due to its robustness and reliability.

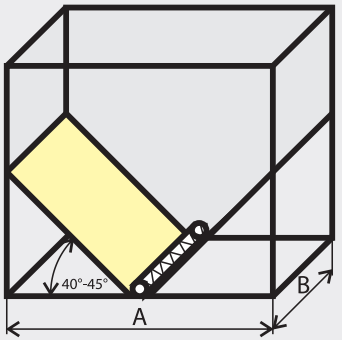

Recommended min. - max. room storage dimension
min. **AxB = 1,5 x 2,5 m**
max. **AxB = 4 x 8 m**





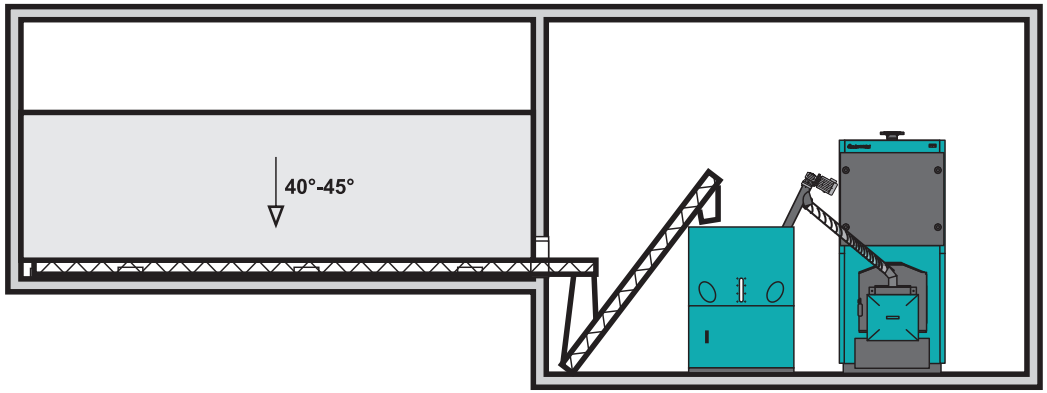

EXAMPLE: refilling the boiler EKO-CKS P Unit (140 - 560 kW), by supplying pellets from the room storage to the pellet tank CPSP-800 or CentroPelet box
Possibility of installing a cascade of two boilers on one pellet tank CPSP-800.

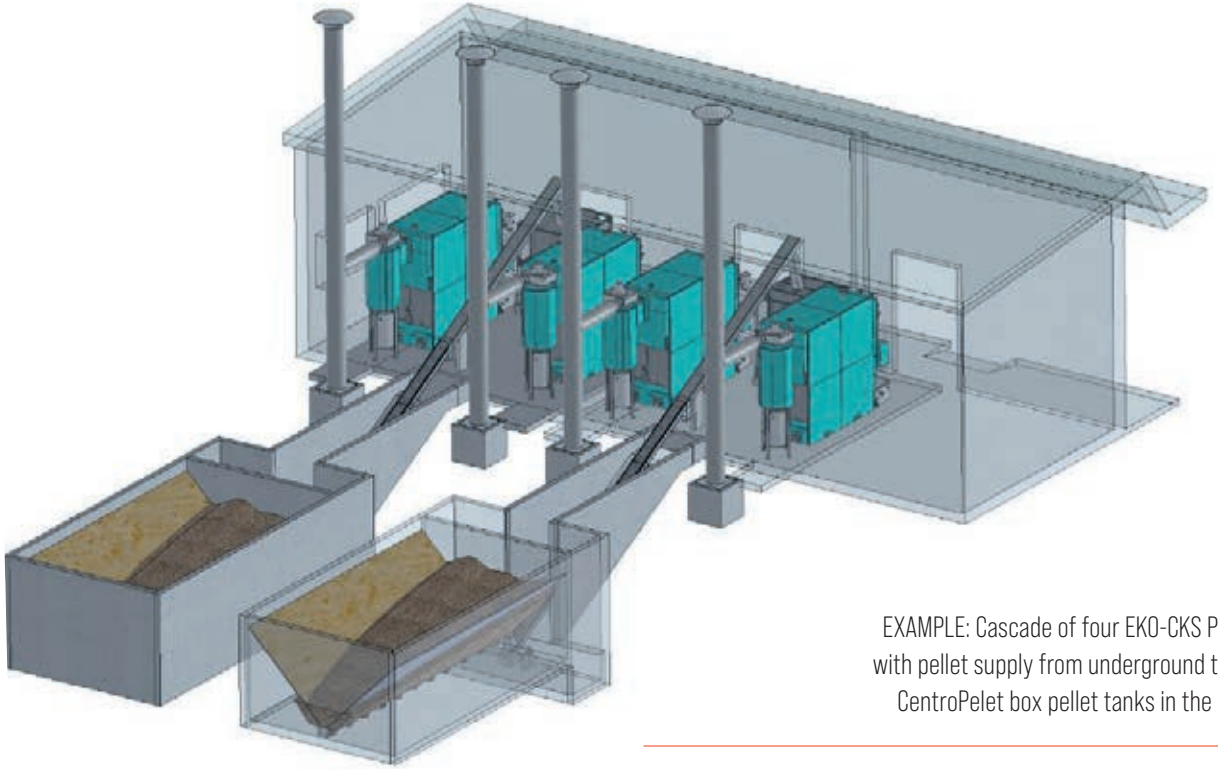

EXAMPLE: Cascade of four EKO-CKS P Unit boilers with pellet supply from underground tanks to two CentroPelet box pellet tanks in the boiler room.



Pellet supply from an external waterproof silo

Filling a smaller tank from the outside can be done from an external silo with a screw transporter. The silo is made of very strong fiberglass which is used in the construction of boats and yachts.

This pellet transport is intended for higher power systems due to its robustness and reliability. Silo capacities from 2.4 tons to 60 tons of pellets, height from 3.7 m to 13 m, diameter from 1.6 to 4 m.







BIO-SC

Steel hot water boiler

The steel hot water boiler for central heating **BIO-SC** with a nominal heat output of 48 to 96 kW is designed for burning with wood chips.

The boiler is equipped with a wood chip burner with automatic ignition, self-cleaning of the grate and flue passages. Factory-installed protection against flame return and thermal protection against boiler overheating are important safety features of the boiler. Integrated boiler return line protection ensures flawless boiler operation even at lower return temperatures.

The multifunctional digital boiler controller with touch screen controls the operation of the boiler via a built-in lambda probe and a modulating flue gas fan.

The controller control the heating system according to the selected scheme. The boiler needs to be upgraded with a wood chip transporter and mixer that can be located either in the storage room or in the wood chip tank.

A number of proven technical solutions makes these boilers safe and reliable in operation. The boiler has been tested and certified according to EN 303-5 and meets class 5. It is manufactured in accordance with ISO 9001 and ISO 14001.



WOOD CHIPS



BOILER CLASS 5

ECODESIGN APPROVED ErP

Characteristics of BIO-SC boilers

- Boiler class 5, Ecodesign.
- Hot water boiler for central heating on wood chips, sizes P16S - P31S / (G30 - G50), moisture content W20-W35 / M20..., power 48 and 96 kW.
- Low emissions of harmful compounds in flue gases.
- Modulating boiler operation (30 % -100 %).
- Built-in lambda probe for combustion optimization.
- Built-in lambda probe for combustion optimization.
- Automatic cleaning of the burner grate and flue passages and automatic removal of ash in containers with a volume of 68 liters.
- Integrated back burn protection (RSE) and thermal protection of the boiler against overheating.
- The multifunctional digital controller with 7" color touch screen controls boiler operation, wood chip supply and heating system.
- Obligatory accessories is a mixer with a wood chip transporter or a tank with a wood chip mixer for indoor / outdoor installation.
- Monitoring and controlling the boiler via the Internet (mobile phone, computer, laptop, etc.) via the built-in WiFi chip.
- Additional equipment: CM2K module for controlling 2 (maximum 6) heating circuits according to the outdoor temperature, room corrector CSK and CSK Touch, controlling the boiler operation with an external controller, cascade manager CMNET...
- The boilers have been tested and certified according to EN303-5 and meet class 5 and are manufactured in accordance with ISO 9001 and ISO 14001.

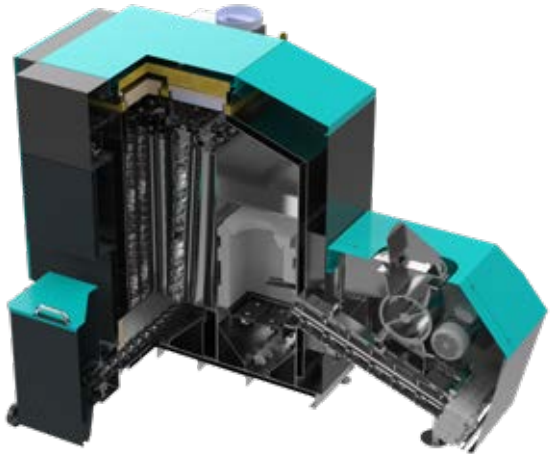

Boiler cross section



Digital boiler controller



Ability to rotate the screen



External ash containers



Electrical cabinet



Delivery and obligatory accessories

Delivery in parts

- Boiler with regulation and electrical cabinet, covered in form work
- Supply conveyor with RSE
- Flue gas fan
- Pump group for return line protection
- Ash boxes with supports
- Ash extraction electric motor
- Cleaning accessories

Obligatory accessories

- Conveyor with mixer/tank
- Safety-vent group
- Accumulation tank

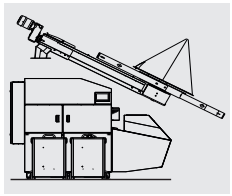

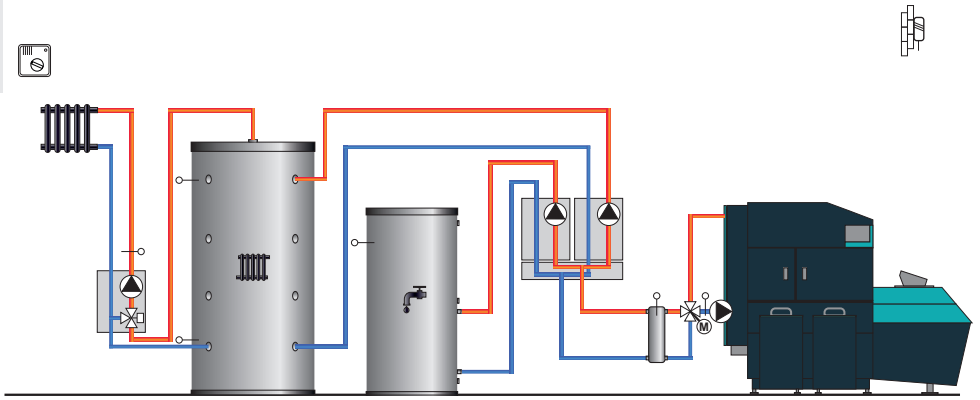

One of the possible 45 schemes of connection to the heating system and DHW with basic equipment

Wood chip supply

Accessories - A

- Transporter with mixer for feeding wood chips from the room/storage

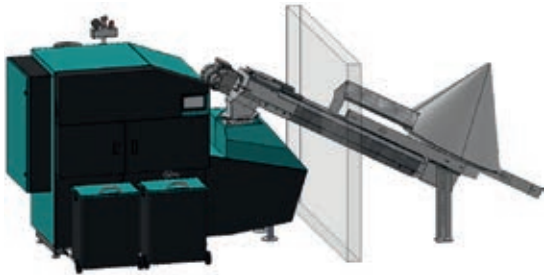

Accessories - B

- Wood chip tank with mixer connected to transporter for outdoor/indoor installation

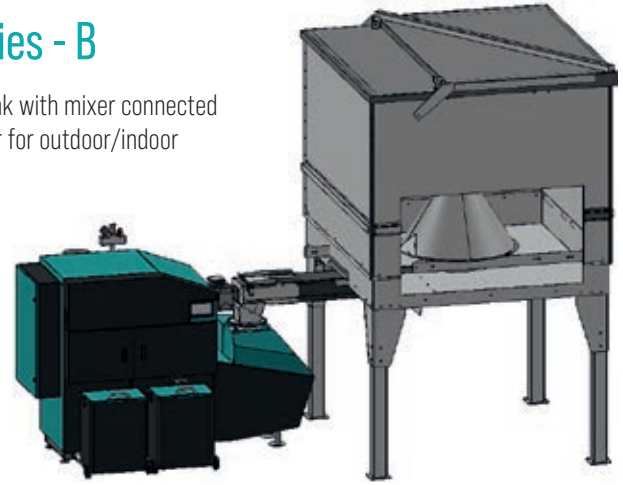

Basic dimensions

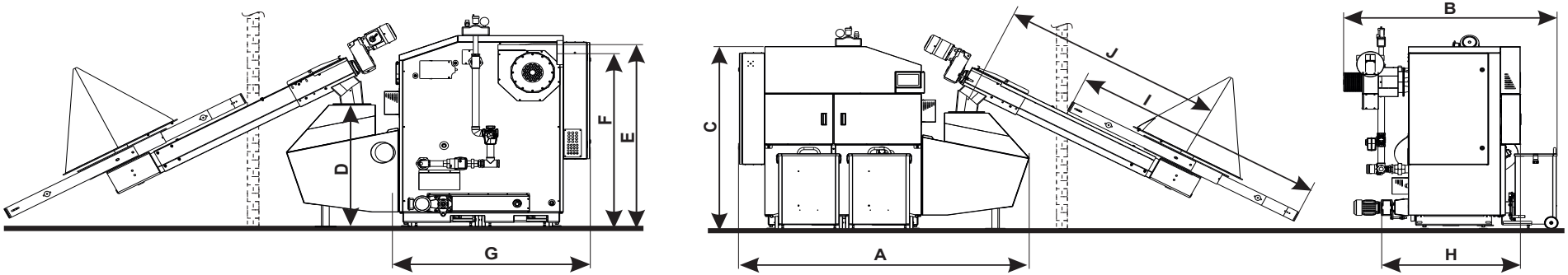

BIO-SC		48	96
Heat output	(kW)	14,4-48	28,8-96
Boiler water content	(l)	145	200
Boiler mass	(kg)	780	1020
Flue gas tube diameter */height (F/E)	Ø (mm)	f150 / 1040 / 1355	f200 / 1300 / 1370
Main flow/Return flow	(R)	5/4"	6/4"
Maximum operating temperature	(°C)	90	90
Maximum operating overpressure	(bar)	2,5	2,5
Boiler width/depth/height (AxBxC)	(mm)	1920x1335x1440	2120x1580x1440
Dimensions for entering the boiler room (GxHxC)	(mm)	1190x955x1440	1355x1025x1440
Wood chip transporter (DxlxJ)	(-)	955mmx2m - 5mx2m - 5m	
Energy efficiency class		A+	

* The inner diameter of the chimney is determined according to the power of the boiler and the height of the chimney and must almost always be larger than the diameter of the flue gas tube

EKO-CKS Multi Plus

Hot water boiler on wood chips or pellets

Steel hot water boilers **EKO-CKS Multi Plus** with a nominal heat output of **170 - 580 kW** are designed for burning **wood chips or wood pellets**.

They are intended for installation in closed or open central heating systems of medium and large buildings. The automatic operation of these systems provides the user with enviable comfort and makes these systems suitable for a wide range of applications.

The boilers have a built-in movable grate on which the fuel burns, lambda probe, automatic fuel injection system, automatic ignition, thermal protection, automatic ash extraction from the burning chamber and a cyclone for the separation of particles from flue gases.

They are recognizable by the successful combination of modern technologies and quality building materials and easy installation and use. A number of proven technical solutions makes these boilers safe and reliable in operation.



WOOD CHIPS



WOOD PELLETS

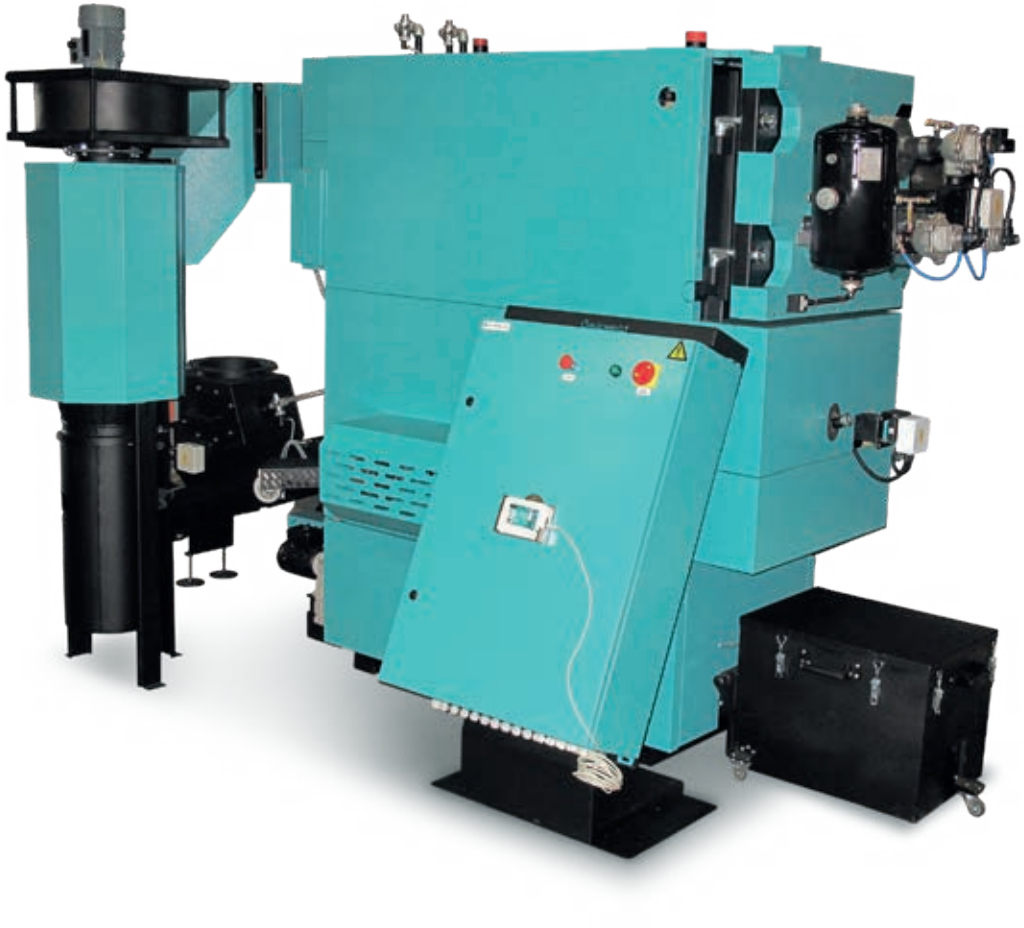

Characteristics of EKO-CKS Multi Plus boilers

- Boiler class 5, Ecodesign.
- They are intended for burning wood chips class P16S - P31S / (G30 - G50), W20 - W35 / M20 and wood pellets class ENplus A1 i A2.
- They are intended for installation in closed or open central heating systems.
- After changing the type, size or humidity of the fuel, it is necessary to make adjustments to the settings of the system, there is the possibility of pre-setting the parameters for certain types of fuel.
- Required voltage 380/400 V.
- Properly dimensioned combustion chamber with a movable grate ensures a high degree of efficiency of the boiler, which makes it "economical".
- The maximum operating overpressure of the boiler is 4 bar, which allows installation in larger heating systems.
- A separate boiler body, cyclone with fan, containers for automatic ash removal, casing with thermal insulation, electrical cabinet with digital boiler controller and cleaning accessories are supplied, which enables easy transport, installation in the boiler room and reduces the risk of damage.
- The boiler is manufactured in accordance with the European standard EN 303-5.

They are equipped with:

- Digital boiler controller with a touch screen that controls the operation of the boiler, the operation of the fuel supply transporter in the boiler as well as with the possibility of controlling up to two additional fuel transporters and a mixer in the fuel tank.
- A movable grate on which the fuel burns.
- Lambda probe.
- Automatic fuel supply to the burner by screw transporter, automatic fuel ignition and automatic ash extraction from the boiler.
- Cyclone with flue gas fan for extracting and separating the particles from the flue gases.
- Turbulators in the flue pipes, thermal protection of the boiler against overheating, protection against flame return to the fuel tank (back filling sensor, damper).
- Automatic flue pipe cleaning system (pneumatic).

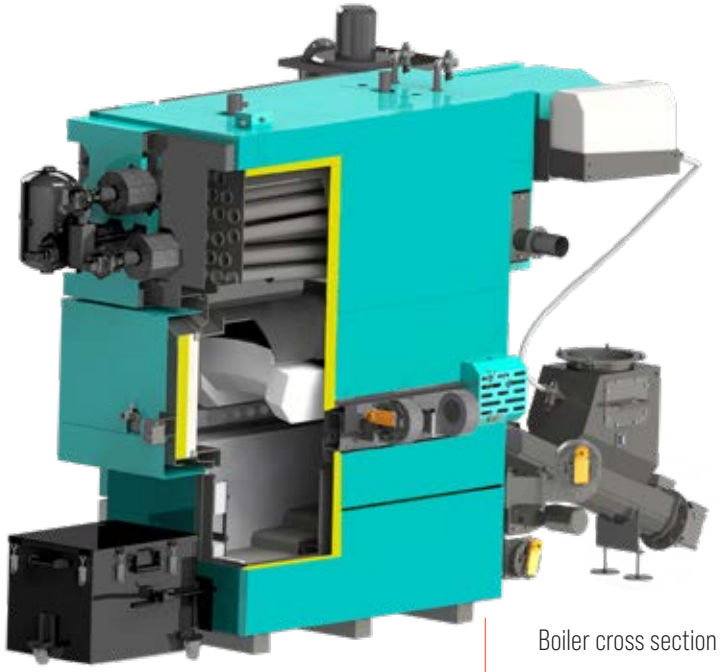

Boiler cross section

Obligatory accessories:

- Fuel connection conveyor.
- Fuel tank: wood chips with mixer and conveyor / wood pellets with conveyor.
- Accumulation tank.
- Return line protection.
- Set of safety elements min. and max. pressure according to EN 12828 above 300 kW.

Additional equipment:

- System for automatic removal of ash from the flue box.
- CM2K (module for controlling 2 heating circuits via external temperature, max. 4xCM2K), CSK/ CSK-Touch room corrector (possible installation with CM2K module), CMNET (cascade manager), CAL (light and sound alarm).
- CM WiFi-box boiler monitoring system via computer, tablet or mobile phone.



Delivery and accessories EKO-CKS Multi (170-580 kW)



Basic delivery

- Boiler body with burner with movable grate
- Supply screw transporter with connection for external supply transporter, back flame protection and backfill sensor
- Casing with thermal insulation
- Cyclone with ash box
- Cyclone fan
- Automatic ash extraction system with ash containers (screw)
- Automatic flue pipe cleaning system (pneumatic)



Obligatory accessories

- Wood chip tank with mixer connected to the conveyor
- Return line protection
- Accumulation tank min. 12 lit./kW



Additional equipment

- CM2K (module for controlling 2 heating circuits via outdoor temperature, maximum 4xCM2K), CSK/CSK-Touch room corrector (possible installation with CM2K module), CMNET (cascade manager), CAL (light and sound alarm), CM WiFi-box
- Connecting screw fuel conveyor between the conveyor from the tank and the conveyor to the boiler
- System for automatic ash removal from the flue box
- Accumulation tank 12 lit./kW

Basic dimensions

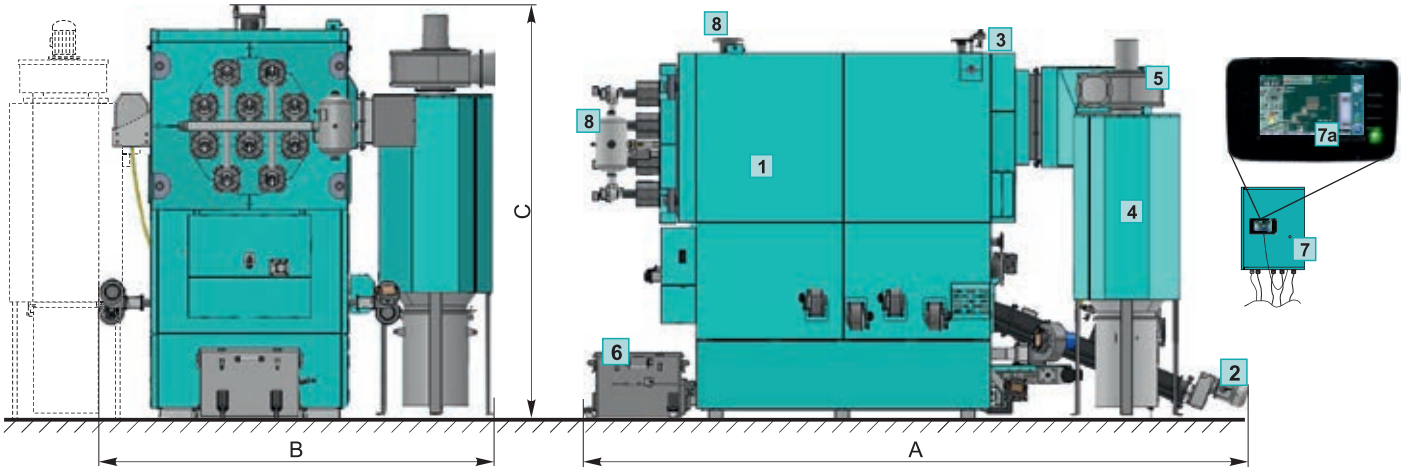

1 Boiler body with burner with movable grate and thermal insulation

2 Supply screw transporter with supply transporter connection 2, back flame protection and back fill sensor

Boiler thermal protection connections

3 Cyclone with ash box (possible

4 installation on the left or right side)

Cyclone fan

5 Automatic ash extraction system with

6 ash containers (screw)

7 Electrical cabinet with digital boiler controller

Controller

7a Automatic flue pipe cleaning system -

8 pneumatic (accessories)

EKO-CKS Multi Plus		170	250	340	450	580
Rated heat output	(kW)	170	250	340	450	580
Power range	(kW)	51-170	75-250	102-340	135-450	174 - 580
Main flow/return flow	(R)/(DN)	2"	80	80	100	100
Maximum operating temperature	(°C)	95	95	95	95	95
Maximum operating overpressure	(bar)	4	4	4	4	4
Total boiler depth (A)	(mm)	3995	4350	4345	4620	4620
Total boiler width (B)	(mm)	2020	2210	2235	2540	2635
Total boiler height (C)	(mm)	2290	2540	2540	2635	2810
Energy efficiency class		A+	A+	A+	A+	A+

Wood chip containers with mixer and conveyor



They are intended for storing and supplying wood chips to boilers such as BIO-SC or EKO-CKS Multi Plus. They are designed to be installed in a covered area or outdoors outside the building. They are equipped with a screw conveyor, an electric motor with a reducer and a wood chip mixer. The tanks are filled from the top after opening the lid, and the wood chips used to fill them may have a maximum moisture content of 35 %.

The operation of the tank equipment is controlled by the digital boiler control in the standard configuration. The tanks are manufactured in the following dimensions: 5.5 m^3, 9 m^3.

Wood chip supply systems from storage room

They are intended for supplying wood chips (maximum humidity up to 35%) from the storage room to boilers such as BIO-SC or EKO-CKS Multi Plus. They are equipped with a rotating plate with springs for mixing wood chips (Ø 1.2 - 5 m) which is connected to a screw conveyor (2.5 - 8 m) driven by an electric motor with a reducer, and the operation of this system is controlled by the digital regulation of the boiler in the standard configuration.

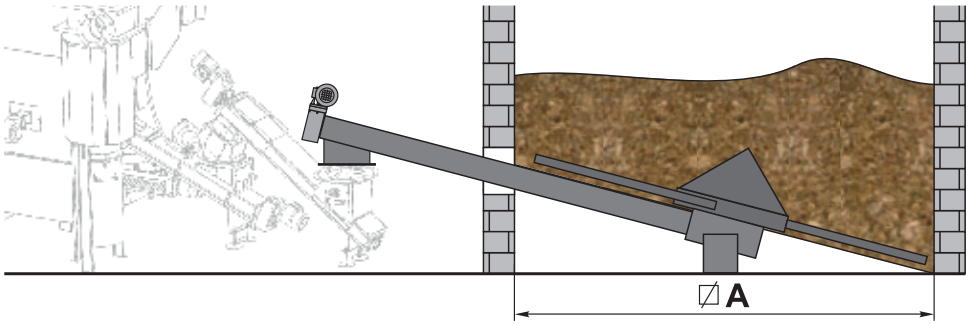

Wood chip container with mixer connected to the transporter





CAS

Accumulation of thermal energy

CAS storage tanks are intended for installation in central heating systems, most often with biomass boilers (such as BioTec-C, BioTec-L, BioTec Plus, EKO-CK P, PelTec, PelTec II Lambda, EKO-CKS P Unit, BIO-SC, EKO-CKS Multi Plus..) in order to accumulate thermal energy and make the boiler work more economically and efficiently.

They are manufactured in several standard sizes (volumes 325, 465, 727, 920, 1426, 2122, 2960, 3820 and 5022 liters) and designs: as a storage tank (CAS), with a built-in stainless steel boiler for preparing domestic hot water (CAS-B), with a built-in tube exchanger for connecting solar collectors (CAS-S) and with a built-in stainless steel boiler and tube exchanger (CAS-BS). Such designs enable the simultaneous use of multiple renewable energy sources, which makes them environmentally and energy-friendly.

With the built-in CAS tanks, it is possible to plan the firing at an acceptable time, and in the case of milder outside temperatures, space heating and heating of domestic hot water without firing the boiler is possible for several days.

The tanks are made of certified materials in accordance with the ISO 9001 and ISO 14001 standards.



Characteristics of CAS buffer tanks

- They are intended for installation in central heating systems to accumulate thermal energy.
- They increase the efficiency and economy of biomass boilers.
- They are made of certified steel sheet in accordance with ISO 9001 and ISO 14001.
- They are well insulated with thermal insulation with a Skai jacket.
- The tanks can be connected to increase the total accumulation in the system.
- They are manufactured in the following sizes and designs as standard:
  * CAS 303 (325 liters), CAS 503 (465 liters), CAS 803 (727 liters), CAS 1003 (920 liters), CAS 1503 (1426 liters), CAS 2003 (2122 liters), CAS 3003 (2960 liters), CAS 4003 (3820 liters), CAS 5003 (5022 liters) - accumulation tank;
  * CAS-S 503 (465 liters), CAS-S 803 (727 liters), CAS-S 1003 (920 liters), CAS-S 1503 (1426 liters), CAS-S 2003 (2122 liters) - accumulation tank with a tube exchanger for connecting solar collectors;
  * CAS-B 503 (465 liters), CAS-B 803 (727 liters), CAS-B 1003 (920 liters), CAS-B 1503 (1426 liters), CAS-B 2003 (2122 liters) - accumulation tank with built-in stainless steel boiler for domestic hot water;
  * CAS-BS 503 (465 liters), CAS-BS 803 (727 liters), CAS-BS 1003 (920 liters), CAS-BS 1503 (1426 liters), CAS-BS 2003 (2122 liters) - accumulation tank with built-in stainless steel domestic hot water tank and tube exchanger for solar collectors.
- Storage tanks of different dimensions, connections or larger volumes (up to 250,000 liters) are made to order.

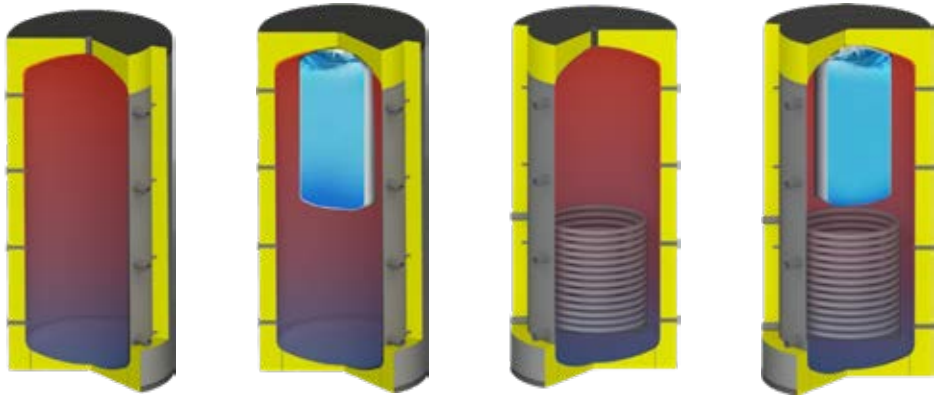

CAS | CAS - B | CAS - S | CAS - BS

Schematic diagram of connecting 2 buffer tanks CAS to a heating system with a pyrolytic boiler

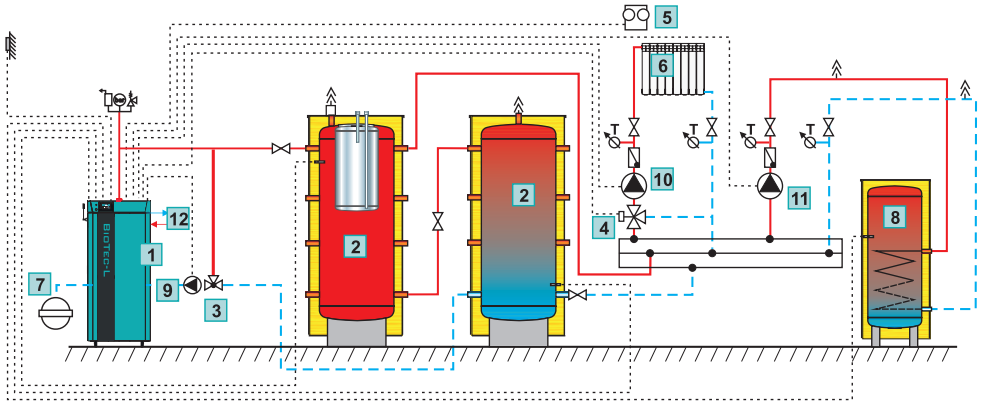

1	Boiler "BioTec-L"	7	Expansion vessel for closed heating systems
2	Buffer tank CAS-B and CAS	8	Domestic hot water tank (SKB / LKB / TB / STB...)
3	Three-way thermostatic valve (60 °C)	9	Pump P1 - boiler pump
4	3-way mixing valve with actuator	10	Pump P2 - heating pump
5	Room corrector	11	Pump P3 - DHW pump
6	Heating circuit	12	Thermal protection of the boiler

CAS tank size selection proposal

- **Pyrolytic combustion boilers:** for every 1 kW of boiler power, a minimum of 40 liters of tank volume.
- **Solid fuel boilers:** for every 1 kW of power, a minimum of 30 liters of tank volume.
- **Wood chip boilers:** for every 1 kW of power, a minimum of 12 liters of tank volume.
- **Wood pellet boilers:** for every 1 kW of power, a minimum of 10 liters of tank volume.

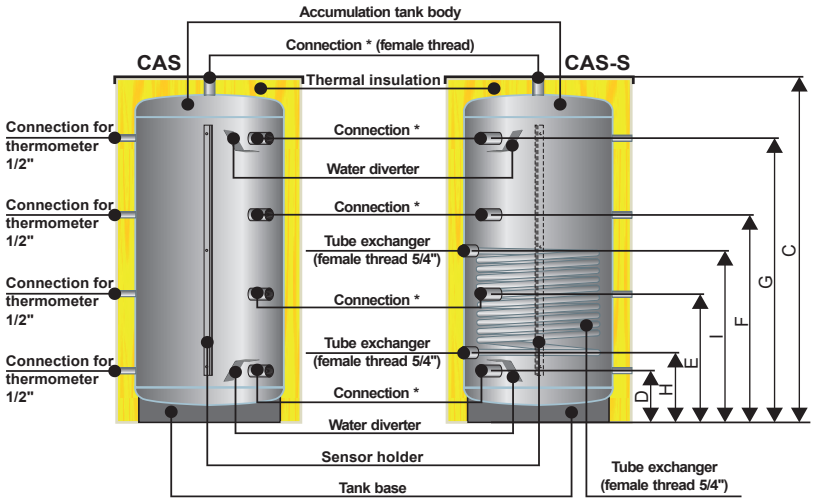

* - Connection - 6/4" (CAS 303 - 2003)
- 2" (CAS 3003 - 4003)
- 2 1/2" (CAS 5003) (female thread)
- 6/4" (CAS-S 503 - 2003) (female thread)

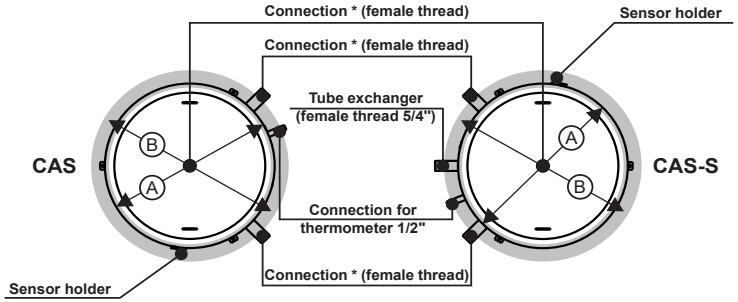

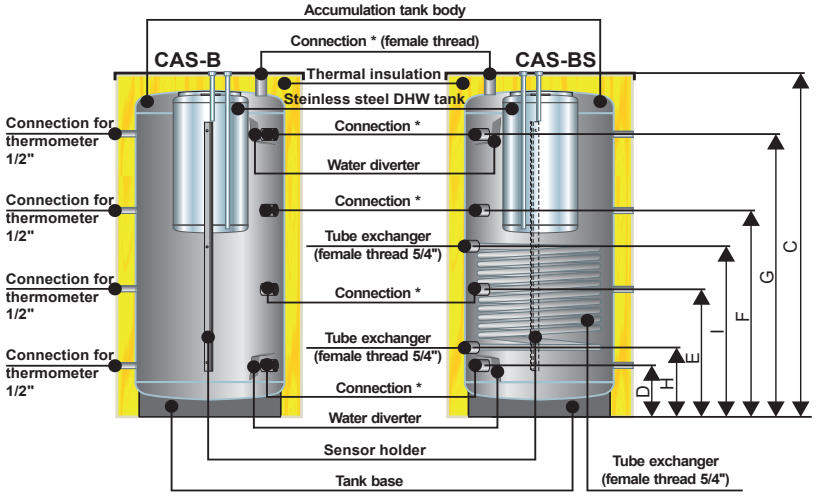

* - Connection 6/4" (CAS-B / BS 503 - 2003) (female thread)

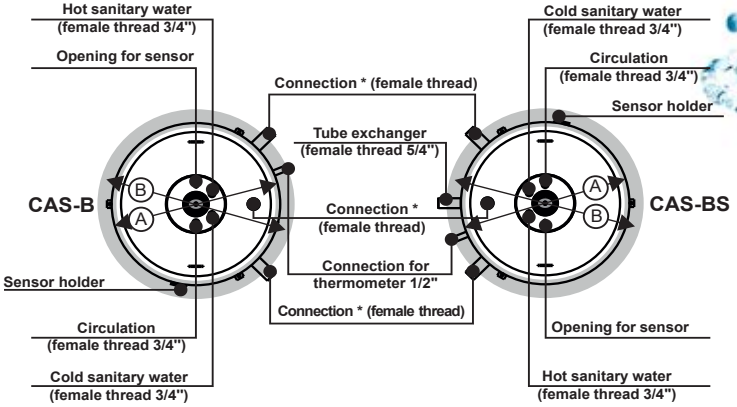

		CAS									CAS-S					CAS-BS					CAS-B				
TYPE		**303**	**503**	**803**	**1003**	**1503**	**2003**	**3003**	**4003**	**5003**	**503**	**803**	**1003**	**1503**	**2003**	**503**	**803**	**1003**	**1503**	**2003**	**503**	**803**	**1003**	**1503**	**2003**
Volume	(lit.)	325	465	727	920	1426	2122	2960	3820	5022	465	727	920	1426	2122	465	727	920	1426	2122	465	727	920	1426	2122
Tank body diameter (D)	Ø (mm)	500	650	790	790	1000	1200	1250	1400	1600	650	790	790	1000	1200	650	790	790	1000	1200	650	790	790	1000	1200
Outer diameter (E)	Ø (mm)	700	850	990	990	1200	1400	1450	1600	1800	850	990	990	1200	1400	850	990	990	1200	1400	850	990	990	1200	1400
Total height (C)	(mm)	1805	1600	1690	2100	2050	2140	2660	2765	2815	1600	1690	2100	2050	2140	1585	1675	2080	2040	2130	1585	1675	2080	2040	2140
Connections	(R)	6/4"	6/4"	6/4"	6/4"	6/4"	6/4"	2"	2"	2 1/2"	6/4"	6/4"	6/4"	6/4"	6/4"	6/4"	6/4"	6/4"	6/4"	6/4"	6/4"	6/4"	6/4"	6/4"	6/4"
Maximum operating pressure	(bar)	3	3	3	3	3	3	3	3	3	3	3	3	3	3	3	3	3	3	3	3	3	3	3	3
Maximum operating temperature	(°C)	100	100	100	100	100	100	100	100	100	100	100	100	100	100	100	100	100	100	100	100	100	100	100	100
Minimum room height	(mm)	2010	1800	1890	2300	2250	2435	2895	3015	3000	1800	1890	2300	2250	2430	1785	1875	2280	2240	2420	1785	1875	2295	2240	2430
Tank body mass	(kg)	60	75	100	115	185	265	320	380	445	100	135	155	245	330	130	185	195	265	345	105	135	155	280	370
Total tank mass	(kg)	65	85	110	130	200	285	345	410	480	110	145	170	260	350	140	195	210	280	345	115	145	170	295	390
DHW tank volume	(lit.)	-	-	-	-	-	-	-	-	-	-	-	-	-	-	125	170	170	170	170	125	170	170	170	170
Maximum DHW tank operating pressure	(bar)	-	-	-	-	-	-	-	-	-	-	-	-	-	-	7	7	7	7	7	7	7	7	7	7
DHW connections	(R)	-	-	-	-	-	-	-	-	-	-	-	-	-	-	3/4"	3/4"	3/4"	3/4"	3/4"	3/4"	3/4"	3/4"	3/4"	3/4"
Heating coil	(m^2)	-	-	-	-	-	-	-	-	-	1,3	2,3	2,6	3,7	4,5	1,3	2,3	2,6	4,5	920	-	-	-	-	-
Heating coil water content	(lit.)	-	-	-	-	-	-	-	-	-	8,1	14	15,7	22,3	27,4	8,1	14	15,7	22,3	27,4	-	-	-	-	-
Thermal insulation	(mm)	100	100	100	100	100	100	100	100	100	100	100	100	100	100	100	100	100	100	100	100	100	100	100	100
Height (A)	(mm)	200	230	320	320	320	365	380	445	475	230	320	320	320	365	230	320	320	320	365	230	320	320	320	365
Height (B)	(mm)	1585	1375	1365	1770	1720	1765	2265	2320	2320	1375	1365	1770	1720	1765	1375	1365	1770	1720	1765	1375	1365	1770	1720	1765
Energy efficiency class		C	C	C	C	C	C	-	-	-	C	C	C	C	C	C	C	C	C	C	C	C	C	C	C

CAS to order

Larger volume storage tanks

With standard accumulation tanks, there is the possibility of ordering other sizes and types of connections. Installing well-dimensioned accumulation tanks with biomass boilers brings numerous benefits and advantages to both households and commercial buildings and central heating systems. Increasing the efficiency of the boiler and heating system, increasing the comfort of firing and heating itself (digital controls guided by the outdoor temperature can be installed, etc.), reducing heating costs and preserving the environment are just some of the reasons why this energy solution has become indispensable in modern heating and cooling systems.

The production program offers the possibility of ordering larger volumes of accumulation tanks, up to 250.000 liters. The installation of accumulation tanks is especially important in central heating systems where energy is distributed to multiple locations. By using large tanks (10.000 to 250.000 liters or as needed), it is possible to better coordinate energy production and consumption at different locations, which results in optimized system operation and better use of available resources.



Characteristics of custom-made CAS storage tanks

- Possibility of different sizes
- Possibility of ordering different types and positions of connections
- Compatibility with biomass boilers
- Designed for installation in households, commercial buildings and central heating systems
- Available volumes from smaller tanks to large systems with capacities up to 250.000 lit.



150.000 lit.



150.000 lit.



200.000 lit.



200.000 lit.



200.000 lit.



200.000 lit.



200.000 lit.



200.000 lit.



250.000 lit.



CAS-HV and CAS-HV 50/100

CAS-HV

CAS-HV 50/100

Buffer tanks

CAS-HV storage tanks are designed to store hot or cold technical water. They are most often connected to heat pumps or water chillers where greater energy storage is required, either thermal or cooling, in order to optimize the operation of the energy source and save electricity.

The **CAS-HV** tank is coated with zinc paint and has high-quality thermal insulation that prevents energy losses to the environment and condensation when storing cold water.

CAS-HV 50/100 are manufactured using the latest welding technology from high-quality steel and have high-quality insulation that prevents energy losses and condensation when storing water.

CAS-HV 50/100 storage tanks are designed for wall or floor mounting in a vertical position.

The tanks are made of certified materials in accordance with ISO 9001 and 14001 standards.



CAS-HV with additional insulation



CAS-HV



CAS-HV 50/100

Characteristics of the CAS-HV and CAS-HV 50/100 storage tanks

- They are made of quality steel in accordance with the ISO 9001 standard and coated with zinc paint.
- High-quality thermal insulation with a vapor barrier type Armaflex is placed before connecting the tank to the installation in order to minimize the possibility of damage.
- To prevent greater heat/cooling losses, 75 mm insulation with a skid coating is also available as an additional equipment.
- They are intended for connection to heat pumps or cooling devices.
- Additional thermal insulation 75 mm thick in a skid coating.
- Given the number of connections, the tanks are simply connected to each other to obtain larger accumulation volumes.
- They are manufactured in accordance with the ISO 9001 and 14001 standards.
- Accumulation tanks of different dimensions, connections or larger volumes are made to order.

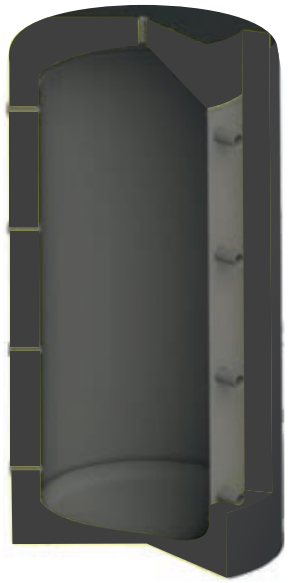

Boiler cross section

CAS-HV		50	100	303	503	803	1003	1503	2003	3003	4003	5003
Volume	(lit.)	50	100	325	465	727	920	1426	2122	2960	3820	5022
Tank body diameter	Ø (mm)	-	-	500	650	790	790	1000	1200	1250	1400	1600
Outer diameter	Ø (mm)	450	525	550	700	840	840	1050	1250	1300	1450	1650
Outer diameter with additional insulation	Ø (mm)	650	725	750	900	1040	1040	1250	1450	1500	1650	1850
Total height	(mm)	880	1030	1805	1600	1690	2100	2050	2140	2660	2765	2815
Connections	(G)	5/4"	5/4"	6/4"	6/4"	6/4"	6/4"	6/4"	6/4"	2"	2"	2 1/2"
Maximum working pressure	(bar)	3	3	3	3	3	3	3	3	3	3	3
Minimum operating temperature*	(°C)	-10	-10	-10	-10	-10	-10	-10	-10	-10	-10	-10
Maximum operating temperature	(°C)	100	100	100	100	100	100	100	100	100	100	100
Minimum room height	(mm)	-	-	2010	1800	1890	2300	2250	2435	2895	3015	3000
Tank body mass	(kg)	30	40	60	75	100	115	185	265	320	380	445
Total tank mass	(kg)	-	-	65	85	110	130	200	285	345	410	480
Thermal insulation	(mm)	35	35	25	25	25	25	25	25	25	25	25
Additional thermal insulation	(mm)	-	-	75	75	75	75	75	75	75	75	75

* Minimum operating temperature refers to a water - glycol mixture

PSS

Accumulation tanks

Storage tanks type **PSS** 50, 100, 200, 300, 400 and 500 are manufactured using the latest welding technology from high-quality steel. They are intended for storing energy from heat pumps and ensure more economical and efficient operation of the system in which they are installed.

The tank should be connected to the central heating/cooling installation according to the recommendations and diagram of the heat pump (heat source) manufacturer. PSS storage tanks are delivered with installed thermal insulation made of rigid polyurethane foam.



Characteristics of PSS storage tanks

- Storage tanks type PSS 50, 100, 200, 300, 400 and 500 capacities.
- They are designed to store energy from heat pumps and ensure more economical and efficient operation of the system in which they are installed.
- They are manufactured using the latest welding technology from high-quality steel.
- The tank should be connected to the central heating/cooling installation according to the recommendations and diagram of the heat pump (heat source) manufacturer.

Delivery

- They are delivered with installed thermal insulation made of rigid polyurethane foam.

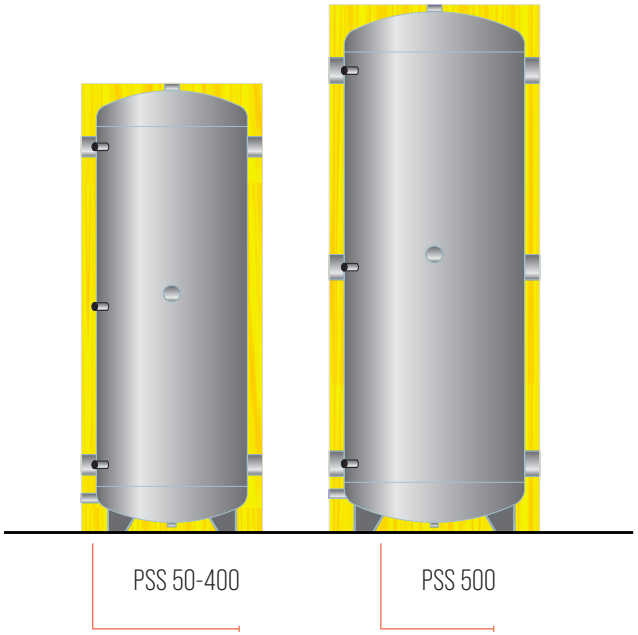

PSS		50	100	200	300	400	500
Volume	(lit.)	57	123	203	277	390	473
Erp class	(-)	B	B	C	C	C	C
Heat losses	(W)	34	50	68	82	105	114
Height of the tank with insulation	(mm)	935	1095	1395	1560	1555	1855
Minimum room height	(mm)	1050	1250	1550	1700	1750	2000
Diameter of the tank with insulation	Ø (mm)	400	500	550	600	700	700
Empty tank weight	(kg)	25	35	45	55	95	100
Maximum working pressure	(bar)	6	6	6	6	6	6
Maximum operating temperature	(°C)	95	95	95	95	95	95

GasTec

Gas condensing combi boiler

The high-efficiency combined gas condensing boiler **GasTec**, type 20, 24 and 35 is designed to fully meet all your requirements for heating and domestic (sanitary) hot water.

They are recognizable by the successful combination of modern technologies and quality building materials, as well as the ease of installation and monitoring.

The use of proven technical solutions makes these boilers extremely economical, safe and reliable in operation.

GAS



GasTec

GasTec water heater characteristics

- High-efficiency gas condensing water heater for space heating and domestic hot water production (models 20, 24, and 35).
- Premium large-surface-area stainless steel heat exchanger with a seamless (weld-free) design.
- Specially designed noise suppressor for near-silent operation.
- High level of comfort ensured by rapid domestic hot water heating via a large plate heat exchanger.
- High seasonal efficiency for both space heating and domestic hot water production.
- Factory-installed high-efficiency electronic pump.
- Intuitive control system with an LCD display.
- Large buttons for easy adjustment of heating and domestic hot water temperatures.
- Smart control adaptation system enables reduced consumption and maximum efficiency.



Cross-section of the water heater



Controller

GasTec		20	24	35
Maximum heat output (80/60 ºC)	(kW)	19,7	24,5	26,9
Maximum heat output (50/30 ºC)	(kW)	21,1	26,2	28,8
Central heating system temperatures	(ºC)	30-85		
Expansion vessel capacity	(lit.)	8		
Maximum central heating pressure	(bar)	3		
Flue types	(-)	C13 - C23 - C33 - C43 - C53 - B3		
Dimensions (WxHxD)	(mm)	400x600x320		
Maximum electric current	(W)	95		
Net weight	(kg)	28,5	29	31,5
Energy efficiency class		A		

EKO-CUP M3 and EKO-CUP M3 Bg

Oil/gas hot water boiler

Steel hot water boilers **EKO-CUP M3** rated heat output 18 to 80 kW and **EKO-CUP M3 Bg** rated heat output 25 to 80 kW are modern design and recognizable by high efficiency and low emissions of combustion products, which is the result of continuous improvement of construction, modern manufacturing technology and quality building materials.

A number of proven technical solutions make these boilers safe and reliable in operation. The three-pass flue gas system is the main reason why we can call them "economical".

A special feature of **EKO-CUP M3 Bg** boilers is the built-in stainless steel tank for domestic hot water immersed in boiler water. This feature makes it extremely interesting, because the existing controller of the boiler is enough to keep the domestic hot water in the tank constantly heated.

Obligatory boiler accessories is boiler controller, **EKO-CUP M3/Bg-REG** or **CUPREG-Touch/90 °C**.



OIL/GAS



Boiler characteristics EKO-CUP M3 / EKO-CUP M3 Bg

- Hot water boiler for central heating with three-pass flue gas system, heat output 18 to 80 kW.
- Economical and environmentally friendly, with a high degree of efficiency.
- Built-in turbulators enable better heat transfer from flue gases to boiler water, regulation of furnace resistance, regulation of flue gas outlet temperature, i.e. coordination of boiler-burner-chimney operation.
- A lot of water in the boiler reduces the number of starts and prolongs the life of the burner and saves energy.
- A special features are quality thermal and sound insulation of the boiler.
- Boiler doors with threaded holes are prepared for the installation of burners and can be opened to the left and right by 90°, which allows easy and quick cleaning of the boiler.
- A special feature of the EKO-CUP M3 Bg is the built-in stainless steel domestic hot water tank immersed in boiler water and a three-pass flue gas system, the EKO-CUP M3 Bg has a heat output of 25 to 80 kW.
- A separate boiler body and a separate casing with thermal insulation is supplied, what allows easy transport and installation of the boiler.
- Obligatory additional equipment is boiler controller. You can choose between EKO-CUP M3/Bg-REG or CUPREG-Touch controller.
- The boiler is manufactured in accordance with ISO 9001 and ISO 14001.

EKO-CUP M3 / Bg-REG

- The basic boiler control unit controls the operation of the single-stage burner according to the set water temperature in the boiler.
- The control unit contains an operating and safety thermostat and a thermometer.

CUPREG-Touch / 90 °C

- Digital boiler controller (maximum boiler operating temperature 90 °C) can control the operation of a single-stage, two-stage or modulating oil or gas burner and controls the central heating system (up to 2 mixing circuits controlled by outdoor temperature), cascade of several boilers and domestic hot water heating.



Basic boiler controller EKO-CUP M3/Bg-REG



Basic boiler controller CUPREG-Touch



Factory-prepared oil / gas burner opening



EKO-CUP M3 boiler connections and cleaning accessories



EKO-CUP M3 Bg boiler connections



Stainless steel DHW tank

Delivery and obligatory accessories

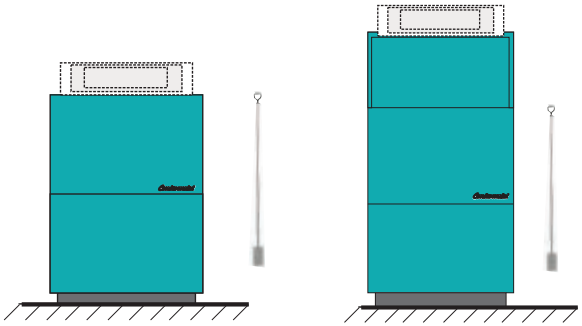

Delivery EKO-CUP M3

- Boiler body with casing, cleaning brush
- Obligatory accessories: EKO-CUP M3/Bg-REG or CUPREG-Touch controller

Delivery EKO-CUP M3 Bg

- Boiler body with casing, cleaning brush
- Obligatory accessories: EKO-CUP M3/Bg-REG or CUPREG-Touch controller

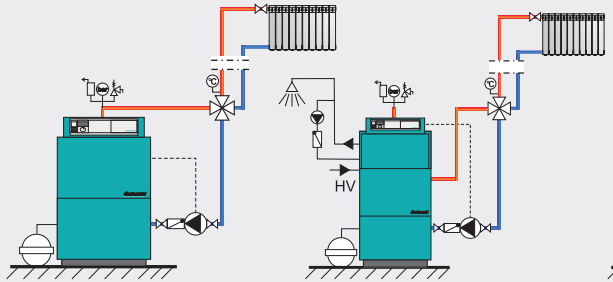

Connection of boiler EKO-CUP M3/Bg to system with one heating circuit with 4-way manual mixing valve and DHW

- EKO-CUP M3/Bg-REG, oil/gas burner, 4-way manual mixing valve

Closed heating system

- Safety airvent group (2.5 bar) and expansion vessel

Open heating system

- Open expansion vessel

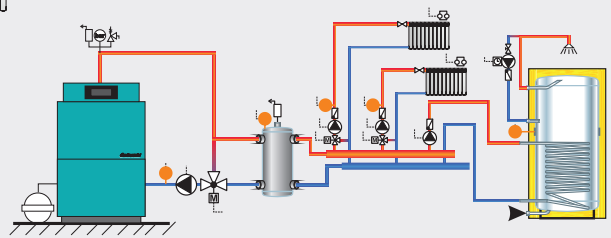

Connection of boiler EKO-CUP M3/Bg to system with hydraulic crossover, 2 heating circuits with mixing valves and DHW with recirculation

- CUPREG-Touch, oil/gas burner, hydraulic diverter, 3-way mixing valve with motor drive...

Closed heating system

- Safety airvent group (2.5 bar) and expansion vessel

Open heating system

- Open expansion vessel

Basic dimensions

EKO CUP M3/M3 Bg		18	25	35	50	65	80
Heat output	(kW)	15-18	18-25	25-35	35-50	50-65	65-80
DHW tank water content	(lit.)	-	-/80	-/80	-/80	-/80	-/120
Continuous DHW (45 °C)	(l/min)	-	-/8,8	-/8,8	-/8,8	-/8,8	-/12,5
Boiler water content	(lit.)	48	54/97	80/98	85/118	105/143	130/170
Boiler mass	(kg)	105	117/195	147/220	168/236	206/275	235/315
Flue gas tube diameter */ height (E)	(mm)	130/440	130/434	130/490	150/515	160/580	160/580
Burner opening	Ø (mm)	100	100	100	100	110	110
Firebox resistance	(mbar)	0,2	0,21	0,25	0,32	0,40	0,50
Chimney underpressure	(Pa)	8	10	12	14	16	18
Main flow/Return flow	(R)	1"	1"	5/4"	5/4"	6/4"	6/4"
Flue gas temperature	(°C)	170	170	170	170	170	170
Maximum operating temperature	(°C)	90	90	90	90	90	90
Maximum operating overpressure	(bar)	2,5	2,5	2,5	2,5	2,5	2,5
Total length (A)	(mm)	1175	1275	1275	1275	1275	1315
Total width (B)	(mm)	500	500	580	630	690	690
Total height (C)	(mm)	790	790/1185	860/1255	890/1285	960/1355	960/1355
Height (D)	(mm)	215	215	230	250	250	250
Height (F)	(mm)	595	595	660	700	760	760
Height (G)	(mm)	-	-/687	-/755	-/800	-/865	-/865
Height (H)	(mm)	-	-/777	-/845	-/890	-/955	-/955
Height (I)	(mm)	-	-/867	-/935	-/980	-/1045	-/1045
Height (J)	(mm)	-	-/1006	-/1080	-/1120	-/1180	-/1180
Height (K)	(mm)	540	540	620	645	710	710

* The inner diameter of the chimney is determined according to the power of the boiler and the height of the chimney and must almost always be larger than the diameter of the flue gas tube

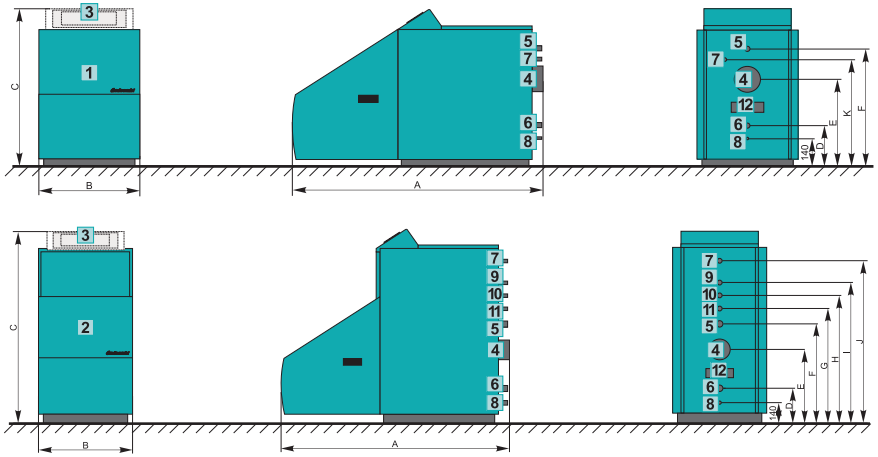

1	Boiler EKO-CUP M3
2	Boiler EKO-CUP M3 Bg
3	Boiler controller (EKOCUP M3/Bg-REG or CUPREG-Touch)
4	Flue gas tube connection
5	Main flow
6	Return flow
7	Safety line
8	Filling/Draining
9	Hot DHW
10	Recirculation
11	Cold DHW
12	Flue gas box cleaning opening

EKO-CUP S3 and EKO-CUP SU3

Oil/gas hot water boiler

Steel hot water boilers **EKO-CUP S3** with a nominal heat output of 125 to 600 kW are intended for heating medium and large buildings, and as a heat source for various technological processes. They are installed either as separate units or several of them are connected in a cascade.

They are recognizable by the successful combination of modern technologies and quality building materials and the ease of installation and supervision. The use of proven technical solutions makes these boilers safe and reliable in operation. The three-pass flue gas system is an important reason for the economy of these boilers.

EKO-CUP SU3 boilers are on average 200 mm narrower and slightly deeper and higher than EKO-CUP S3 boilers.

Obligatory boiler accessory is boiler controller, **EKO-CUP S3/V3-REG** or **CUPREG-Touch**, for which the maximum operating temperature of the boiler must also be selected.



OIL/GAS



Characteristics of EKO-CUP S3 boilers

- Hot water boiler for central heating with three-pass flue gas system, heat output from 125 to 600 kW.
- Max. boiler operating pressure 3 bar (standard) or 6 bar (on request), and 90 °C (standard), 100 °C or 105 °C (on request) max. operating temperature.
- Boiler controller is a obligatory accessory, and you can choose between 4 models:
  ECO-CUP S3/V3-REG /90 °C, CUPREG-Touch /90 °C, CUPREG-Touch /100 °C, CUPREG-Touch /105 °C.
- Built-in turbulators enable better heat transfer from flue gases to boiler water, regulation of furnace resistance, regulation of flue gas outlet temperature, i.e. quality coordination of boiler-burner-chimney operation.
- A lot of water in the boiler reduces the number of starts and prolongs the life of the burner and saves energy.
- All boiler connections are on the top, which allows easy connection to the heating installation.
- Boiler door with blind plate is adapted for the installation of all fan burners on the market and can be opened to the left and right by 90°, which allows easy and quick cleaning of the boiler.
- EKO-CUP SU3 boilers are on average 200 mm narrower and slightly deeper and higher than EKO-CUP S3 boilers.
- Delivery of the boiler: separate boiler body, separate casing with thermal insulation which enables easy transport and installation of the boiler, and separately selected controller.

EKO-CUP S3/V3-REG/90 °C

- The basic boiler controller controls the operation of a single-stage or two-stage burner according to the set water temperature in the boiler.
- In the controller (maximum operating temperature of the boiler 90 °C) there is a safety and operating thermostat of the first and second stage of the burner and a thermometer.

CUPREG-Touch/90 °C/100 °C/105 °C

- Digital boiler controller (maximum boiler operating temperature 90 °C or 100 °C or 105 °C) can control the operation of a single-stage, two-stage or modulating oil or gas burner and controls the central heating system (up to 2 mixing heating circuits controlled by outdoor temperature), cascade of several boilers and domestic hot water preparation.

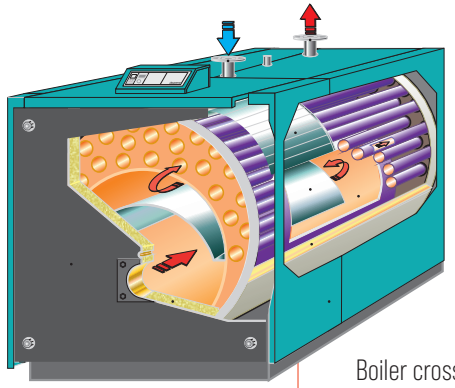

Boiler cross section



Boiler delivery



Boiler connections



Basic boiler controller
EKO-CUP S3/V3-REG



Basic boiler controller
CUPREG-Touch

Delivery and obligatory accessories

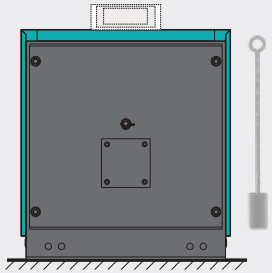

Delivery EKO-CUP S3

- Boiler body, boiler casing, cleaning brush
- Obligatory accessories: EKO-CUP S3/V3-REG ili CUPREG-Touch

Schematic diagram of connection to a hydraulic crossover with basic boiler controller EKO-CUP S3/V3-REG

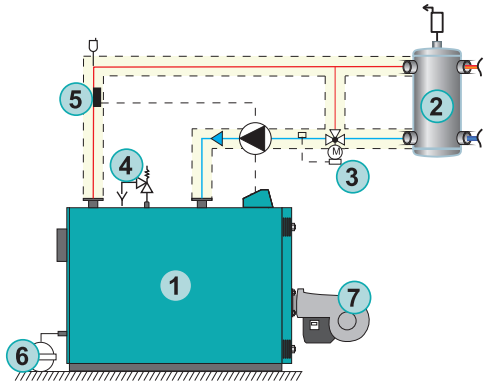

1	Boiler EKO-CUP S3
2	Hydraulic crossover
3	3-way mixing valve with actuator ESBE CRA controller (60 °C).
4	Certified safety valve
5	Contact pipe thermostat
6	Expansion vessel
7	Oil/gas burner

Schematic diagram of connection to a hydraulic crossover with boiler controller CUPREG-Touch

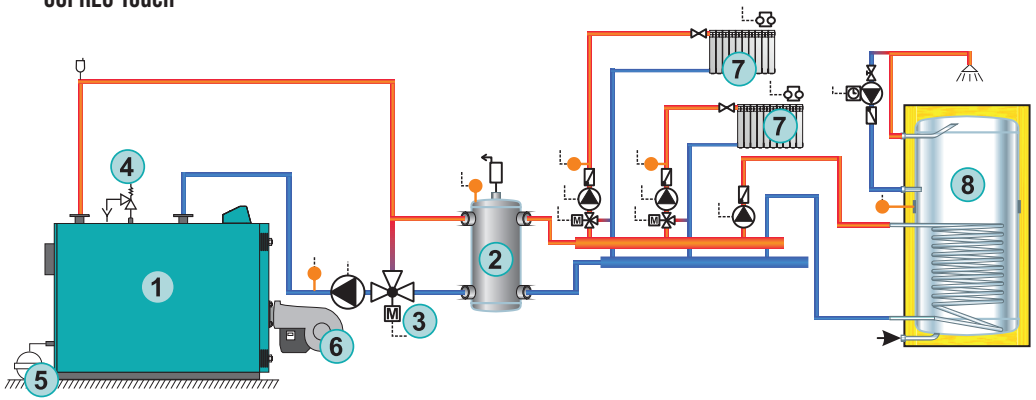

1	Boiler EKO-CUP S3 - set of safety elements min. and max. pressure above 300 kW according to EN 12828
2	Hydraulic crossover
3	3-way mixing valve with actuator
4	Approved safety valve
5	Expansion vessel
6	Oil/gas burner
7	Heating circuits with actuators
8	DHW tank with recirculation

Basic dimensions

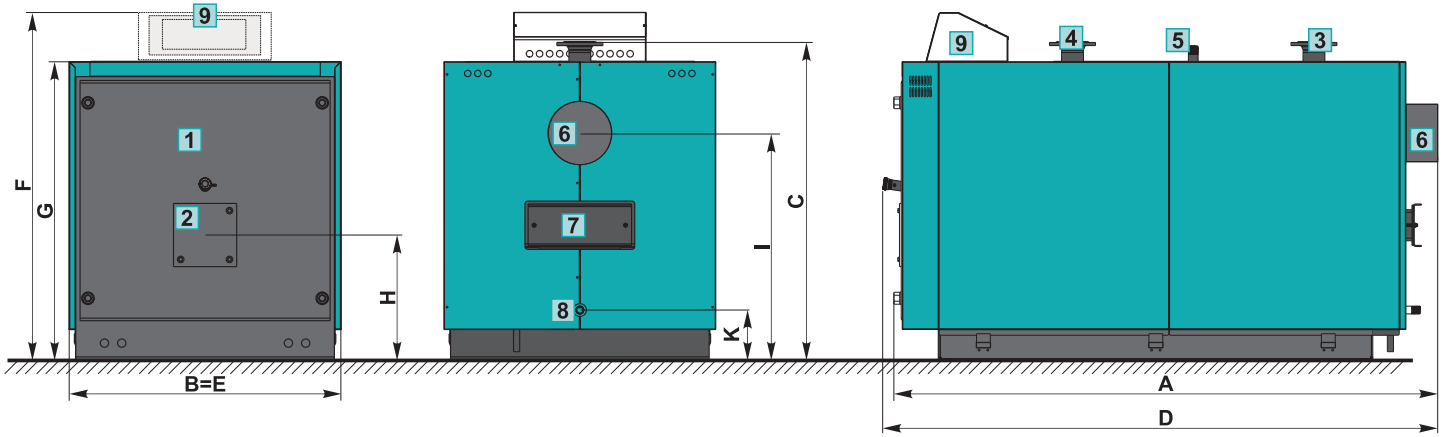

EKO-CUP S3		125	160	240	320	400	460	530	600
Heat output	(kW)	37,5-125	48-160	72-240	96-320	120-400	138-460	168-530	180-600
Boiler water content	(lit.)	225	290	390	465	615	735	865	970
Total boiler mass	(kg)	445	563	673	867	1080	1184	1418	1515
Maximum operating temperature	(°C)	90/100/105	90/100/105	90/100/105	90/100/105	90/100/105	90/100/105	90/100/105	90/100/105
Maximum operating overpressure/flanges	(-)	3 bar/NP6 ili 6 bar/NP16							
Flue gas tube diameter*/height	(mm)	180/700	200/790	200/790	250/890	250/970	250/970	300/1062	300/1062
Burner opening	Ø (mm)	130	130	170	170	170	220	220	220
Combustion chamber resistance	(mbar)	1,7	2,5	2,6	2,8	3,5	4,0	4,3	4,9
Main flow/return flow	(-)	R 2"	DN 50	DN 65	DN 80	DN 80	DN 80	DN 80	DN 100
Filling/draining	(R)	3/4"	3/4"	3/4"	3/4"	1"	1"	1"	1"
Safety line	(R)	1"	5/4"	5/4"	6/4"	6/4"	6/4"	6/4"	6/4"
Flue gas temperature	(°C)	160	160	160	160	160	160	160	160
Boiler body length (A)	(mm)	1650	1510	1915	1915	1970	2270	2270	2520
Boiler body length (B)	(mm)	775	945	945	1045	1150	1150	1250	1250
Boiler body length (C)	(mm)	970	1110	1110	1225	1355	1355	1460	1455
Total length (D)	(mm)	1660	1510	1930	1930	1985	2285	2285	2530
Total width (E)	(mm)	780	945	945	1050	1150	1150	1250	1250
Total height (F)	(mm)	1080	1195	1195	1305	1405	1405	1505	1505
Height (G)	(mm)	910	1040	1040	1150	1250	1250	1350	1350
Height (H/K)	(mm)	360/175	440/175	440/175	440/175	450/185	450/185	475/185	480/185

* The inner diameter of the chimney is determined according to the power of the boiler and the height of the chimney and must almost always be larger than the diameter of the flue gas tube

1. Boiler EKO-CUP S3
2. Burner mounting plate
3. Boiler main flow
4. Boiler return flow
5. Safety line
6. Flue gas tube connection
7. Cleaning opening
8. Filling/draining
9. Boiler controller (EKO-CUP S3/ V3-REG or CUPREG-Touch)

EKO-CUP V3 and EKO-CUP SV3

Oil/gas hot water boiler

Steel hot water boilers **EKO-CUP V3** with a nominal heat output of 0.8 to 1.5 MW and **EKO-CUP SV3** with a nominal heat output of 1.5 MW to 2.1 MW are intended for heating medium and large buildings and as a heat source for various technological processes.

They are installed either as separate units or several of them are connected in a cascade. They are recognizable for their modern design and successful combination of modern manufacturing technologies and quality construction materials, as well as for easy installation and supervision.

The use of proven technical solutions makes these boilers safe and reliable in operation. The three-pass flue gas system is an important contribution to the economy of these boilers.

Obligatory boiler accessory is boiler controller, **EKO-CUP S3/V3-REG** or **CUPREG-Touch**, for which the maximum operating temperature of the boiler must also be selected.



OIL/GAS

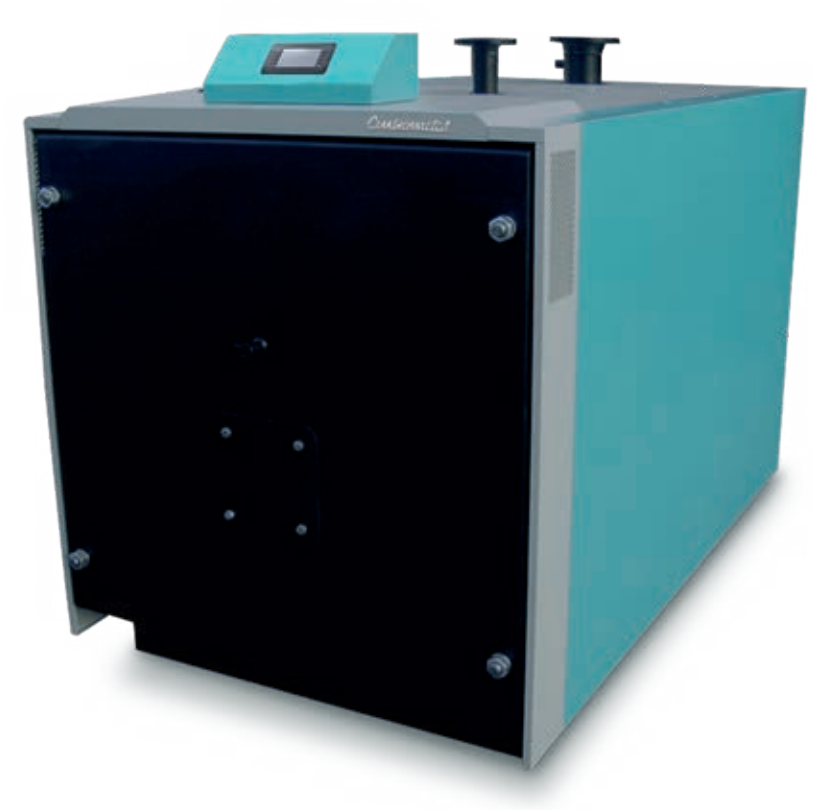

Characteristics of boilers EKO-CUP V3/SV3

- Hot water boiler for central heating with a three-pass flue gas system, thermal output from 0.8 to 2.1 MW.
- The maximum operating overpressure of the boiler is 6 bar, which allows installation in central heating systems of tall buildings.
- The maximum operating temperature of the EKO-CUP V3 boiler is 105 °C, while the maximum operating temperature of the EKO-CUP SV3 boiler is 100 °C.
- Built-in spiral turbulators enable better heat transfer from flue gases to boiler water, regulation of, regulation of flue gas outlet temperature, i.e. high-quality coordination of boiler-burner-chimney operation.
- A lot of water in the boiler reduces the number of starts and prolongs the life of the burner and saves energy.
- The technical solutions used are the reason for almost negligible initial condensation.
- All boiler connections are on the top, which allows for easy connection to the installation.
- Boiler door with a blind panel is adapted for the installation of all burners on the market and can be opened to the left and right by 90°, which allows for easy and quick cleaning of the boiler.
- Delivery of the boiler: separate boiler body, separate casing with thermal insulation which enables easy transport and installation of the boiler, and separately selected controller.

EKO-CUP S3/V3-REG/90 °C/SV3/100 °C

- The basic boiler control (for EKO-CUP V3 and SV3 it is possible to order a control with a maximum operating temperature of the boiler of 90 °C or 100 °C) controls the operation of a single-stage or two-stage burner according to the set water temperature in the boiler.
- The control contains a safety and operating thermostat for the first and second burner stages and a thermometer.

CUPREG-Touch/90 °C/100 °C/105 °C

- Digital boiler control (with EKO-CUP V3 it is possible to order a control with a maximum boiler operating temperature of 90 °C, 100 °C or 105 °C, and with EKO-CUP SV3 with a maximum boiler operating temperature of 100 °C) can control the operation of a single-stage, two-stage or modulating oil or gas burner and controls the central heating system (up to 2 mixing circuits controlled by the outdoor temperature), a cascade of multiple boilers and domestic hot water preparation.
- Additional equipment: Remote monitoring and control of the boiler via a web portal (CM WiFi-box), minimum/maximum pressure limiter (mandatory above 300 kW), module for additional heating circuits (CM2K), room correctors (CSK/CSK-Touch), cascade manager (CMNET), fuel level sensor in the tank...

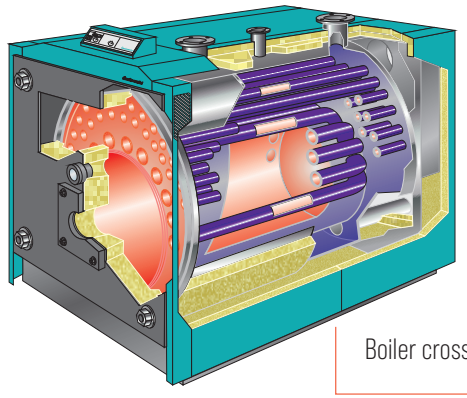

Boiler cross section



Boiler delivery



Boiler connections



Basic boiler controller EKO-CUP S3/V3-REG



Basic boiler controller CUPREG-Touch

Delivery and obligatory accessories

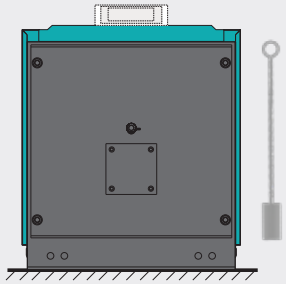

Delivery EKO-CUP V3/SV3

- Boiler body, boiler casing, cleaning brush
- Obligatory accessories: EKO-CUP S3/V3-REG or CUPREG-Touch

Schematic diagram of connection to a hydraulic crossover with basic boiler controller EKO-CUP S3/V3-REG

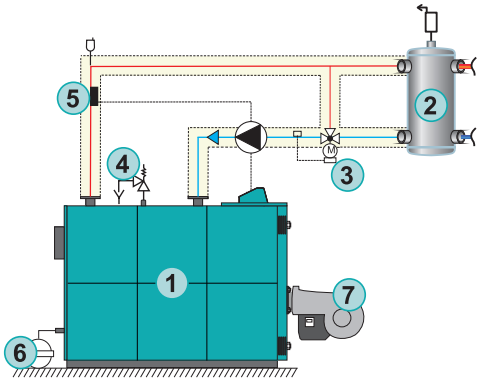

1	Boiler EKO-CUP V3/SV3
2	Hydraulic crossover
3	3-way mixing valve with actuator ESBE CRA controller (60 °C).
4	Certified safety valve
5	Contact pipe thermostat
6	Expansion vessel
7	Oil/gas burner

Schematic diagram of connection to a hydraulic crossover with boiler controller CUPREG-Touch

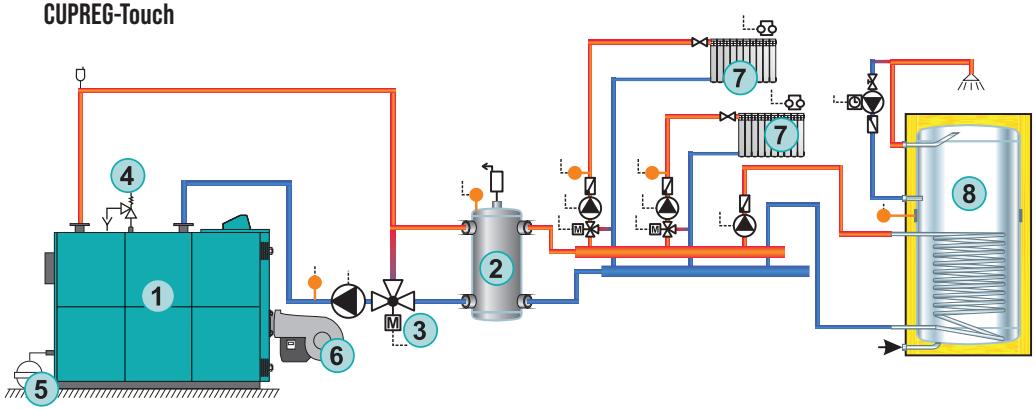

1	Boiler EKO-CUP V3/SV3 - set of safety elements for min. and max. pressure according to EN12828
2	Hydraulic crossover
3	3-way mixing valve with actuator
4	Certified safety valve
5	Expansion vessel
6	Oil/gas burner
7	Heating circuits with actuators
8	DHW tank with recirculation

Basic dimensions

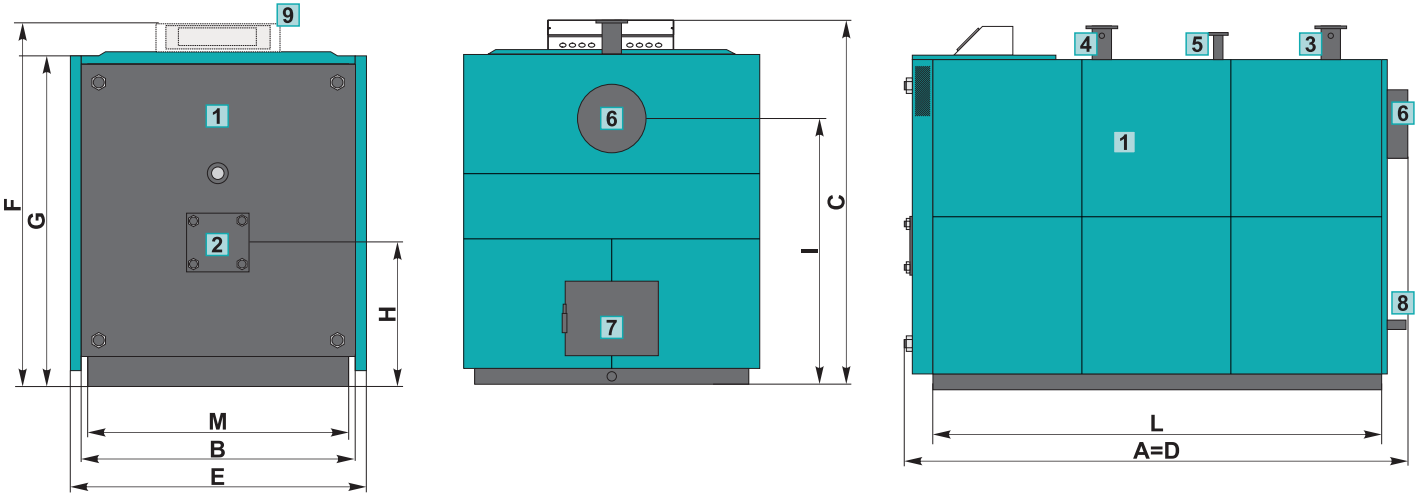

EKO-CUP V3						EKO-CUP SV3
		800	1000	1250	1500	2500
Heat output	(kW)	800	1000	1250	1500	2100
Heat output range	(kW)	240-800	300-1000	375-1250	450-1500	630-2100
Boiler water content	(lit.)	1020	1150	1410	1510	3000
Boiler body mass	(kg)	2104	2320	2770	2950	5200
Maximum operating temperature	(°C)	90/100/105	90/100/105	90/100/105	90/100/105	100
Maximum operating overpressure	(bar)	6	6	6	6	6
Flue gas tube diameter*	Ø (mm)	300	300	400	400	450
Flue gas tube height (I)	(mm)	1150	1220	1370	1415	1580
Main flow/return flow (NP 16)	(DN)	100	125	125	150	150
Safety line (NP 16)	(DN)	50	65	65	65	50
Filling/draining	(R)	5/4"	5/4"	5/4"	5/4"	6/4"
Flue gas temperature	(°C)	160	160	160	160	165
Boiler body dimensions (AxBxC)	(mm)	2505x1335x1615	2510x1405x1690	2520x1555x1880	2500x1600x1925	3480x1865x2145
Total boiler dimensions (DxExF)	(mm)	2505x1400x1630	2510x1470x1700	2520x1620x1890	2500x1600x1920	3480x1930x2145
Height (G/H)	(mm)	1445/660	1515/660	1705/765	1725/770	1965 / 1035
Stand width (M)	(mm)	1265	1335	1485	1530	1800
Stand length (L)	(mm)	1960	1960	1960	1960	2880
Combustion chamber resistance	(mbar)	6,3	7,1	7,9	8,7	10,4

* The inner diameter of the chimney is determined according to the power of the boiler and the height of the chimney and must almost always be larger than the diameter of the flue gas tube

1	Boiler EKO-CUP V3/SV3
2	Burner mounting plate
3	Boiler main flow
4	Boiler return flow
5	Safety line
6	Flue gas tube connection
7	Cleaning opening
8	Filling / draining
9	Boiler controller (EKO-CUP S3/V3-REG or CUPREG-Touch)

CUPREG-Touch



The **CUPREG-Touch** digital boiler control is intended for installation on EKO-CUP M3/Bg, EKO-CUP S3/SU3, EKO-CUP V3 and EKO-CUP SV3 hot water boilers.

Depending on the ordered control, the maximum boiler temperature of the EKO-CUP M3/Bg is 90 °C, EKO-CUP S3 and EKO-CUP V3 is 90 °C, 100 °C and 105 °C and EKO-CUP SV3 100 °C.

It can control the operation of a single-stage, two-stage or modulating oil or gas burner.

It can control a central heating system, up to 2 mixing heating circuits controlled by the outside temperature and the preparation of domestic hot water with recirculation.

One of 27 different connection schemes can be selected.

Possibility of remote monitoring and control of the boiler via a web portal (optional CM WiFi-box), alarm module with light and sound (optional CAL), possibility of installing modules for controlling additional heating circuits (optional CM2K, maximum 4 modules) and CSK, possible installation of an oil level sensor in the tank (optional oil level sensor), possible installation of a cascade manager (up to 8 boilers in a cascade (optional CMNET), minimum/maximum pressure limiter (mandatory above 300 kW)...

Example of several possible CUPREG-Touch controller configurations

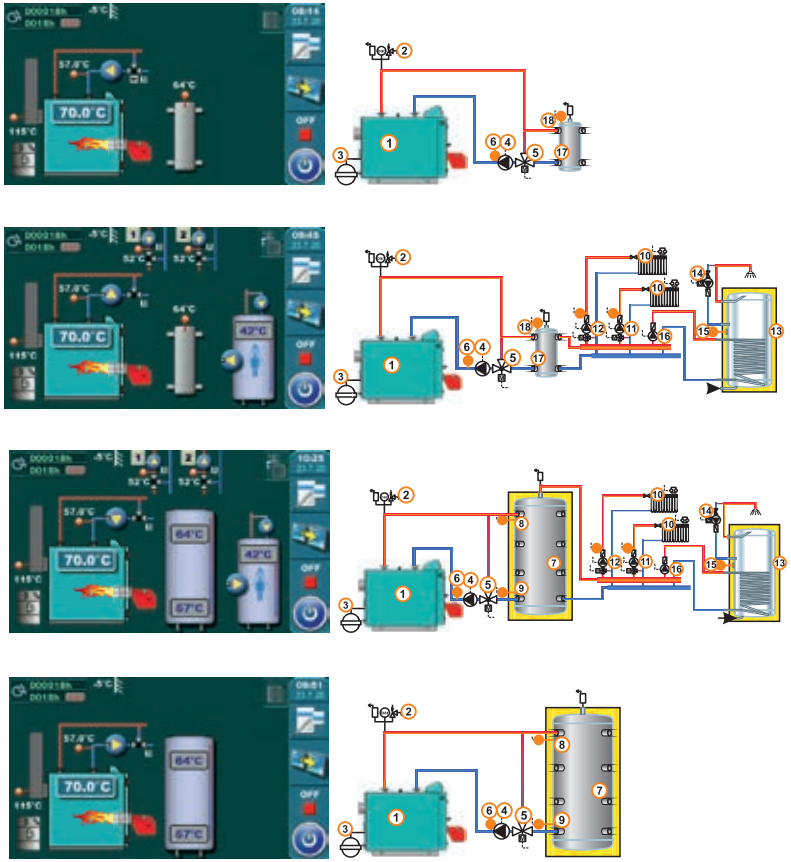

EKO-CUP M3/Bg-REG



- Basic boiler control unit **EKO-CUP M3/Bg-REG** for installation on EKO-CUP M3 and EKO-CUP M3 Bg boilers
- Maximum operating temperature of the boiler is 90 °C
- Possibility of controlling a single-stage burner according to the set water temperature in the boiler
- Possibility of turning on/off the circulation pump
- The control unit has a built-in safety thermostat, operating thermostat and thermometer

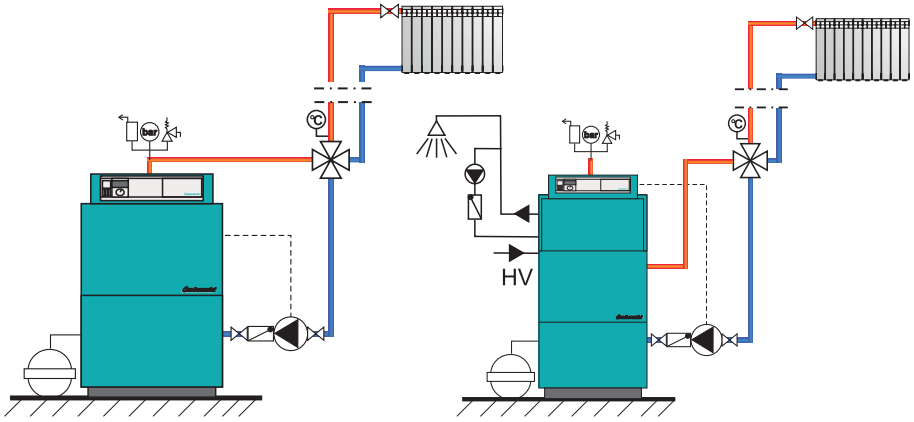

EKO-CUP S3/V3-REG/90 °C/SV3 100 °C



- Basic boiler control unit **EKO-CUP S3/V3-REG/90 °C** for installation on boilers EKO-CUP S3, EKO-CUP V3 and EKO-CUP SV3, SV3 100 °C
- The maximum operating temperature of the EKO-CUP S3, EKO-CUP V3 and EKO-CUP SV3 boilers is 100 °C
- Possibility of controlling a single-stage or two-stage burner according to the set water temperature in the boiler
- Possibility of turning on/off the circulation pump
- The control unit has a built-in operating thermostat of the first and second stages, a safety thermostat and a thermometer

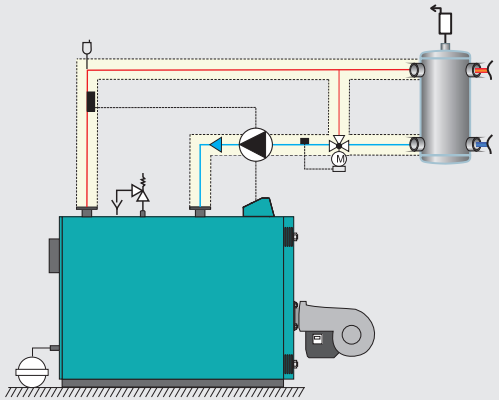

CSK-Touch

CSK-Touch digital room corrector, with a 4,3'' color touch screen, allows you to control the room temperature and turn the heating circuit on and off. In addition to measuring and correcting the room temperature, this room corrector allows you to adjust the temperature of the buffer tank or hydraulic crossover and the temperature of domestic hot water (DHW) if any and set the timers for heating circuit, boiler and DHW and start and turn off the boiler (except pyrolytic).

By connecting several digital room correctors to the boiler, it is possible to set the desired temperatures on other correctors via one corrector.

If the boiler to which the CSK-Touch is connected is connected to the Centrometal web portal, a five-day weather forecast can be displayed on the corrector screen. On the boiler to which the corrector is connected, the rights to change certain parameters on an individual corrector can be determined, so that the possibility of turning the boiler on/off, changing the timers can be prohibited...

If several CSK-Touch or CSK correctors are connected to the boiler/CM2K, all other correctors can be controlled via only one CSK-Touch corrector.



Possible connection to boilers:

Variant 1:

CSK-Touch can be connected to PelTec/PelTec-lambda, BioTec-L, BioTec Plus, Pelet-set Touch, EKO-CKS P Unit and EKO-CKS Multi Plus boilers with a built-in CM2K module in the following ways:

- **wirelessly via WiFi network (requires CM WiFi-box)**
- **wirelessly via router (requires CM WiFi-box)**
- **wired (via a two-wire cable to the CM2K module)**

CSK-Touch can be connected to Pelet-set Touch, BioTec-L and BioTec Plus without the CM2K module, but then it must be connected only via the CM WiFi-box or via a router with the help of the CM WiFi-box. Wired connection directly to BioTec-L, BioTec Plus and Pelet-set Touch boilers (without CM2K module) is not possible.

Variant 2:

CSK-Touch can be connected to PelTec II Lambda, PelTec Compact, ZVB II and BIO-SC boilers (without CM2K module) via the factory-installed WiFi chip in the 7'' screen wirelessly, or wired:

- **wirelessly via WiFi network (WiFi chip factory-installed in 7'' screen)**
- **wirelessly via router (WiFi chip factory-installed in 7'' screen)**
- **wired (via two-wire cable to boiler)**

When the CM2K module is installed, the CSK-Touch connects wirelessly via the factory-installed WiFi chip in the boiler screen, and wired via a two-core cable to the CM2K module.

Several ways of connecting

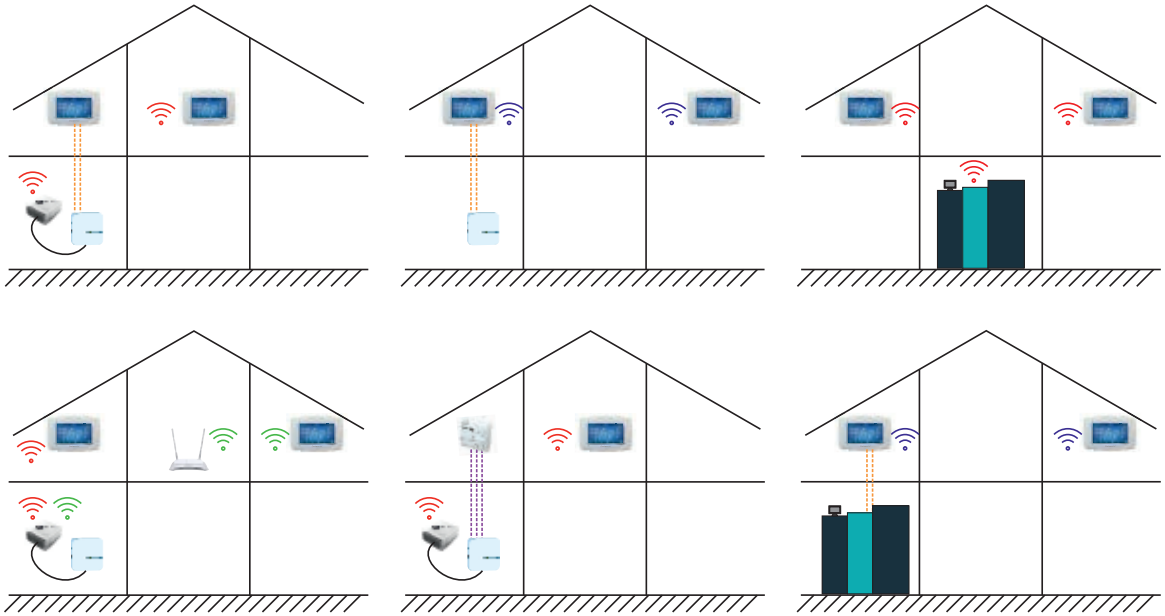

Few examples of a screen







CSK



CSK is an analog room corrector that enables correction of the set temperature in the room according to the set temperature on the boiler regulation.

On the corrector, it is possible to turn off/on the heating circuit to which it is connected.

The corrector can be connected to the CM2K module and PelTec II Lambda, PelTec Compact, ZVB II, BIO-SC, Cm Pelet-set Touch, BioTec-L and BioTec Plus boilers and CUPREG-Touch regulation.

The corrector is connected to the boiler or CM2K module via 2 or 3 wires. When connected via 2 wires, temperature correction is disabled.



Accessories for boilers with digital boiler controller with touch screen (4,3" i 7" screen)

CM2K

Module for controlling additional heating circuits



- Enables control of up to 2 heating circuits according to the external temperature and heating curve (control of up to 2 motorized mixing valves and up to 2 heating pumps or up to 2 DHW circuits or up to 2 recirculation circuits or up to 2 DHW + recirculation circuits)
- Possible connection of up to 4 modules (up to 8 heating circuits)
- Possible connection of up to 2 room correctors CSK via 2 or 3 wires (additional equipment)
- Possible connection of up to 2 CSK-Touch room correctors via 2 wires or wirelessly (via CM WiFi-box)/(accessories)
- Possible connection to PelTec, PelTec-lambda, PelTec-Compact, PelTec II Lambda, ZVB II, BioTec-L, BioTec Plus, Cm Pelet-set Touch, EKO-CKS P UNIT, BIO-SC, EKO-CKS Multi Plus, CUPREG-Touch

CSK

Analog room corrector



- Enables correction of the set temperature in the room (according to the set temperature on the boiler regulation)
- Possibility of turning off the heating circuit in the room where the corrector is located
- It can be connected to CM2K module and Pelet-set Touch, PelTec-Compact, PelTec II Lambda, ZVB II, BioTec-L and BioTec Plus boilers and CUPREG-Touch regulation
- Connection to the boiler or CM2K module via 2 or 3 wires

CSK-Touch

Digital room corrector



- Wire connection (with 2 wires) to CM2K, PelTec-Compact, PelTec II Lambda, ZVB II, BIO-SC
- Wireless connection (connection via CM WiFi-box or with 7" screen with WiFi chip: to CM2K module, BioTec-L, BioTec Plus, Cm Pelet-set Touch), PelTec-Compact, PelTec II Lambda, ZVB II, BIO-SC
- Possibility of wireless communication between multiple CSK-Touch devices
- Enables room temperature management, turning on/off the heating circuit, switching times, weather forecast (only with CM WiFi-box or 7" screen)
- Enables basic management of the boiler and heating system temperatures, notification of errors and warnings from the boiler, setting of administrator rights of each thermostat



CM WiFi-box

Boiler monitoring and control via the Internet



- Enables monitoring and management of boiler operation using a computer, mobile phone, etc. by connecting to a web portal via WiFi network (for 4.3" screens)
- Turning on/off the boiler, setting the temperature and switching times, receiving warnings and errors on the portal and email, weather forecast...
- Wireless connection of CSK-Touch to CM2K module or Cm Pelet-set Touch, BioTec-L and BioTec Plus boiler and CUPREG-Touch regulation
- Possible connection to PelTec, PelTec-lambda, BioTec-L, BioTec Plus, Cm Pelet-set Touch, EKO-CKS P UNIT, EKO-CKS Multi Plus, CUPREG-Touch, Cm-SOL

CAL

Sound or light warning or error signal



- Module for notification by sound or light signal of error or warning from the boiler
- Possible connection to PelTec, PelTec-Lambda, PelTec-Compact, ZVB II, BioTec-L, BioTec Plus, Cm Pelet-set Touch, EKO-CKS P UNIT, BIO-SC, EKO-CKS Multi Plus, CUPREG-Touch

CMNET

Cascade connection of boilers



- It enables cascade control of 2 to 8 boilers
- For a cascade of 2 boilers = 1x CMNET, for a cascade of 3 to 8 boilers = each boiler one CMNET
- An external start is required to start the cascade operation
- Connection to boilers using UTP cables
- Possible connection to PelTec, PelTec-lambda, PelTec-Compact, ZVB II, BioTec-L, BioTec Plus, Cm Pelet-set Touch, EKO-CKS P UNIT, BIO-SC, EKO-CKS Multi Plus, CUPREG-Touch

Flue gas tubes and elbows

Flue gas tubes and elbows are intended for easy, fast and safe connection of each type of boiler to the chimney in the building.



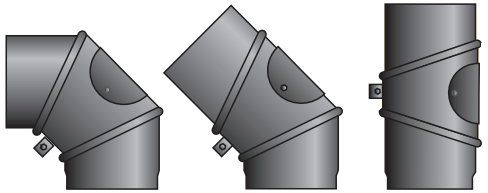

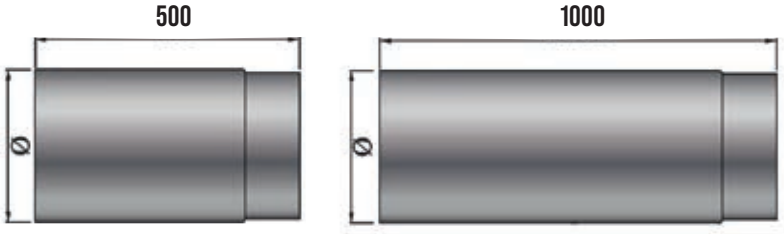

Characteristics of flue gas tubes and elbows

- They are made of steel sheet (DD13), 2 mm thick.
- Their surface is protected by a plastic coating process.
- The flue elbows are made of three parts (segments), adjustable at an angle of 0°-90°, with built-in cleaning hole.
- Flue pipes and elbows are supplied without thermal insulation and must be subsequently thermally insulated.

Flue gas elbows and tubes							
Flue gas elbow	(mm)	Ø 120	Ø 130	Ø 150	Ø 160	Ø 180	Ø 200
Flue gas elbow L=500	(mm)	Ø 120	Ø 130	Ø 150	Ø 160	Ø 180	Ø 200
Flue gas elbow L=1000	(mm)	Ø 120	Ø 130	Ø 150	Ø 160	Ø 180	Ø 200

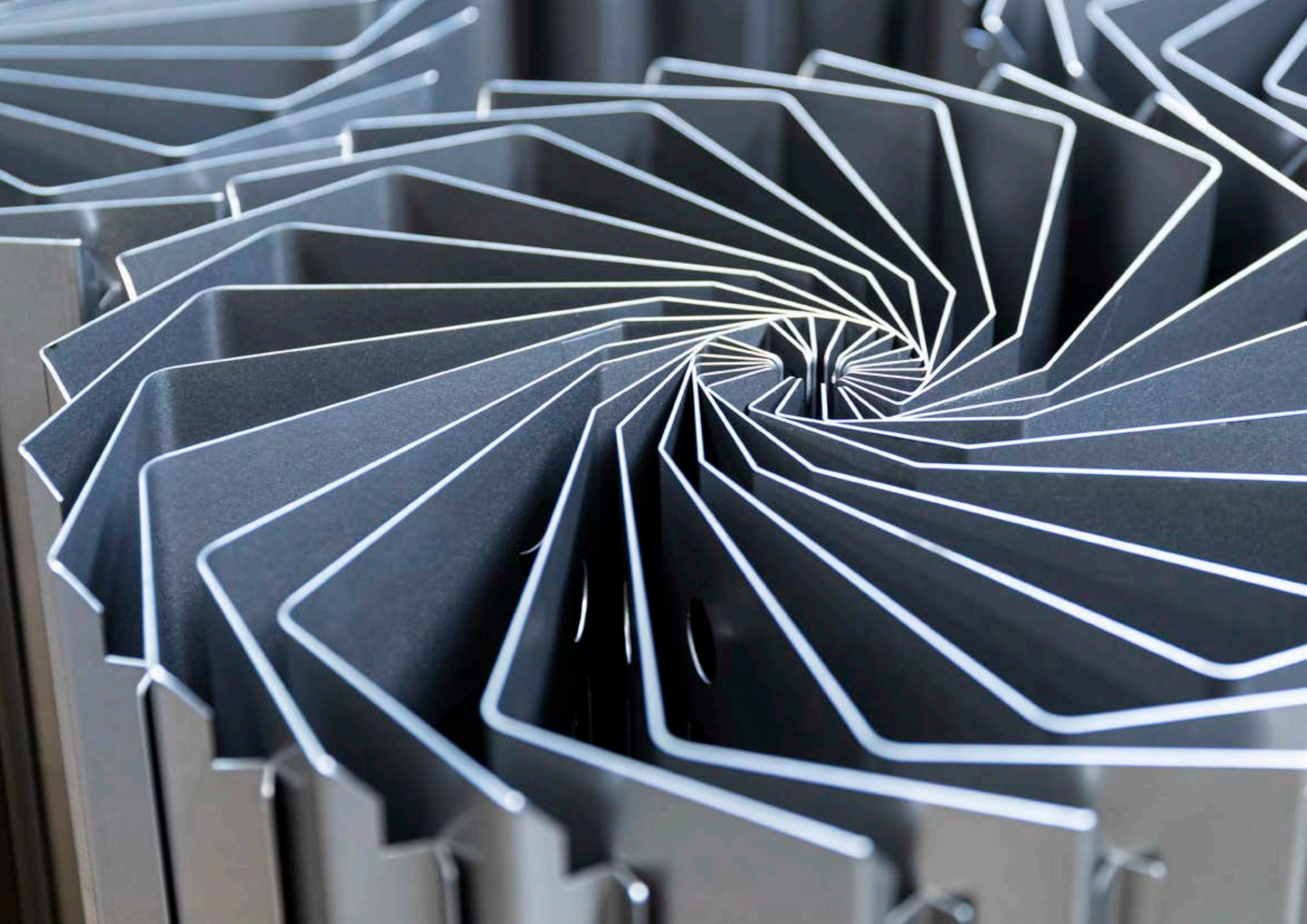

EI-Cm eBasic / EI-Cm Classic / EI-Cm ePlus

EI-Cm eBasic

EI-Cm Classic

EI-Cm ePlus

Hot water electric boilers

Steel hot water electric boilers **EI-Cm eBasic/Classic/ePlus**, with a nominal heat output of 6 to 45 kW, are designed for heating houses or apartments and production processes as an independent or auxiliary source of heat using electricity.

Today, they are increasingly used for heating domestic hot water in storage boilers, by connecting to the boiler's tubular exchanger. **EI-Cm Classic** and **ePlus** boilers are equipped with a circulation pump, expansion vessel, modern modulating digital regulation and the necessary safety elements.

Noiseless operation and modern design make them acceptable for installation in any part of the house or apartment, especially since they do not require ventilation or a chimney. The use of modern manufacturing technologies, high-quality construction materials and proven technical solutions that include all the advantages of modulating regulation of the operation of electric heaters, make these boilers safe and reliable in operation.

The EI-Cm Basic boiler from 50 to 240 kW can be delivered to order.

ELECTRICITY



EI-Cm eBasic

EI-Cm ePlus

EI-Cm Classic

Characteristics of EI-Cm eBasic boilers

- Hot water boiler designed for heating with electricity, with a nominal heat output of **6, 9, 12, 18, 24, 30, 36, 40** and **45 kW**.
- The delivery includes a boiler with electric heaters and microprocessor control.
- The boiler power can be limited to 3 levels, depending on the nominal power.



EI-Cm eBasic - boiler controller

Characteristics of EI-Cm Classic

- Hot water boiler designed for heating with electric energy, with a nominal heat output of **6, 9, 12, 18, 24** and **27 kW.**
- Electric boilers are equipped as standard with: a boiler body with electric heaters, a circulation pump, an expansion vessel, safety elements (safety valve, safety thermostat and pressure switch), a filling and draining tap and modulating digital control.
- Modulating digital control optimally controls the operation of the electric heater in **3 modulation stages** so as to optimize the consumption of electricity with the output of the electric boiler.



EI-Cm Classic - digital boiler controller

Characteristics of EI-Cm ePlus

- Hot water boiler designed for heating with electric energy, with a nominal heat output of **6, 9, 12, 18** and **24 kW.**
- Electric boilers are equipped as standard with: a boiler body with electric heaters, a circulation pump, an expansion vessel, safety elements (safety valve, safety thermostat and pressure switch), a filling and draining tap and a modulating digital control.
- Modulating digital control optimally controls the operation of the electric heater with up to **9 modulation levels** so as to optimize the consumption of electricity with the output of the electric boiler.
- The control can control the heating of domestic hot water via a 3-way valve with a motor drive (heating priority).



EI-Cm ePlus - digital boiler controller



Boiler connections

Characteristics of electric boilers

- Silent operation, modern design and small dimensions make them suitable for installation in any part of the house or apartment, especially since they do not require ventilation or a chimney.
- They are light in weight and easy to install.
- The 6 and 9 kW boilers can also be connected to a single-phase electrical connection.
- The EI-Cm Classic and EI-Cm ePlus boilers are like “boiler rooms” in miniature, because all their essential parts are integrated into a compact housing.



Boiler connections

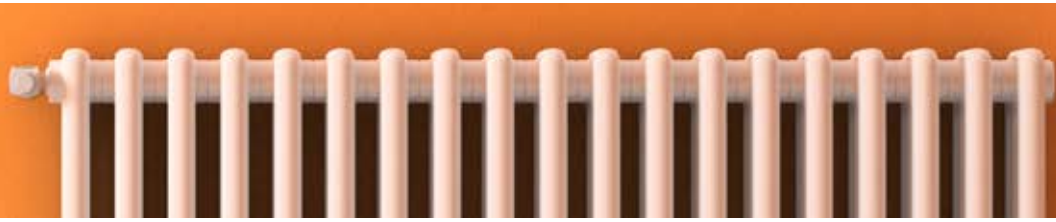

Delivery, obligatory accessories

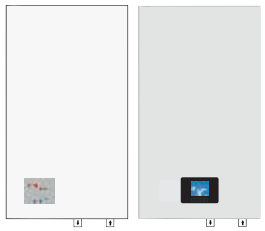

Delivery EI-Cm eBasic

– Boiler with casing and basic regulation, wired, in a cardboard box

Delivery EI-Cm Classic and ePlus

– Boiler with casing, pump, safety valve, expansion tank and digital regulation, wired, in a cardboard box

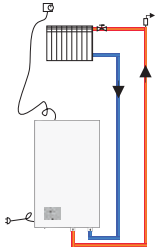

Connection to the heating system

– Safety valve*, expansion vessel*

– Heating pump*

– Room thermostat

* In the contents of the boiler delivery EI-Cm Classic and EI-Cm ePlus

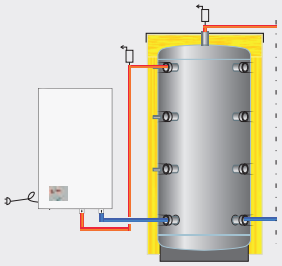

Connection to an accumulation tank to accumulate cheap electricity tariffs

– Accumulation tank CAS volume adapted to optimal use of the cheaper electricity tariff

– Pump, expansion and safety valve in delivery of EI-Cm Classic and EI-Cm ePlus boilers

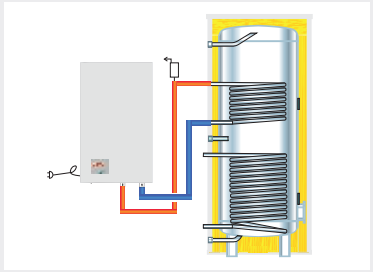

Reheating the DHW tank

– When electricity is the only conventional heat source, the electric boiler is connected to the upper exchanger (when there is a solar system) or the lower exchanger (when there is no solar system)

– Pump, expansion and safety valve in the delivery of EI-Cm Classic and EI-Cm ePlus boilers

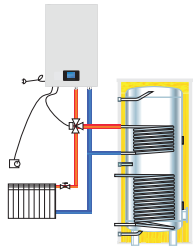

Connection to the heating system and DHW with the EI-Cm ePlus boiler

– When the heating is satisfied, the basic boiler control can switch the 3-way valve with motor drive to heating domestic hot water.

Technical characteristics

EL-CM eBasic 6-45 kW		6	9	12	18	24	30	36	40	45
Heat output	(kW)	6	9	12	18	24	30	36	40	45
Boiler water content	(lit.)	14,2					21			
Boiler mass (without water)	(kg)	20	21	21	21	22	28	28	28	29
Max. operating temperature	(°C)	80								
Max. operating overpressure	(bar)	3								
Main/Return flow	(DN)	DN25								
Electric heaters	(kW)	3x2	3x3	3x4	3x6	3x8	5x6	5x7,2	5x8	5x9
Conductor cross section	(mm^2)	5x2,5		5x4		5x6	5x10		5x16	
Connection voltage	(V/Hz)	400/50								
Boiler dimensions (WxHxD)	(mm)	450x600x162					450x450x215			
Energy efficiency class		D								

EL-CM Classic 6-27 kW		6	9	12	18	24	27
Heat output	(kW)	6	9	12	18	24	27
Boiler water content	(lit.)	12,5					
Boiler mass (without water)	(kg)	23	24	24	25	25	25
Max. operating temperature	(°C)	80					
Max. operating overpressure	(bar)	2,6					
Main/Return flow	(DN)	DN20, 3,4"					
Electric heaters	(kW)	3x2	3x3	3x4	3x6	3x8	3x9
Conductor cross section	(mm^2)	5x2,5	5x2,5	5x4	5x4	5x6	5x6
Expansion vessel	(lit.)	8					
Connection voltage	(V/Hz)	400/50					
Boiler dimensions (WxHxD)	(mm)	430x710x230					
Energy efficiency class		D					

EL-CM ePlus 6-24 kW		6	9	12	18	24
Heat output	(kW)	6	9	12	18	24
Boiler water content	(lit.)	12,5				
Boiler mass (without water)	(kg)	25				
Max. operating temperature	(°C)	80				
Max. operating overpressure	(bar)	2,6				
Main/Return flow	(G)	DN20 SN/DN2 UN				
Electric heaters	(kW)	3x2	6x1,5	6x2	9x2	9x2,7
Conductor cross section	(mm^2)	5x2,5	5x2,5	5x4	5x4	5x6
Expansion vessel	(lit.)	7,5				
Connection voltage	(V/Hz)	400/50				
Boiler dimensions (WxHxD)	(mm)	430x710x230				
Energy efficiency class		D				

eCompact Uz / El-Cm Professional

eCompact Uz

El-Cm Professional

Built-in electric boilers and mobile electric unit

The **eCompact Uz** and El-Cm Professional electric heating systems offer solutions for permanent and temporary heat production.

The **eCompact Uz** built-in electric boilers, with a power of **6, 9, 12** and **16 kW**, are intended for radiator and floor heating in apartments and houses and are located in a wall-mounted cabinet with the possibility of integrating a distributor for up to 7 circuits, which saves space and simplifies installation. Equipped with processor control with an LCD display, a built-in pump, safety elements and a 10 liter expansion tank, they enable 6 power levels and safe and quiet operation without the need for a chimney.

The **El-Cm Professional** is a mobile electric heating unit, with a power of **21,6 kW** or 36 kW, intended as a temporary heat source for closed heating systems and indirect preparation of domestic hot water up to 90 °C, with integrated CPU control, suitable for use in residential, commercial, industrial and public buildings, for indoor use only.

ELECTRICITY

eCompact UZ





El-Cm Professional

Characteristics of eCompact Uz

- Built-in electric boiler eCompact Uz for radiator or underfloor heating 6, 9, 12 and 16 kW.
- Wall-mounted cabinet with integrated space for radiator/underfloor heating distributor.
- Possibility of installing a collector/distributor for up to 7 circuits.
- Processor unit for control and management with LCD screen for monitoring temperature, power and pressure.
- High-efficiency pump, safety valve, pressure sensor, filling and emptying valve and 10-liter expansion tank.
- Up to 6 operating powers with mechanical and electronic protection.

Characteristics of EI-Cm Professional

- Mobile electric heating unit EI-Cm Professional with 21,6 or 36 kW power.
- For indoor use only.
- Possibility of indirect hot water preparation via heat exchanger.
- Maximum water temperature up to 90 °C.
- Application in households, companies, industrial facilities and public buildings.



Wall-mounted cabinet with divider



Digital boiler controller
EI-Cm Professional

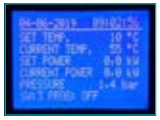

Digital boiler controller
EI-Cm Professional

eCompact Uz		6	9	12	16
Heat output	(kW)	6	9	12	16
Boiler water content	(lit.)	9			
Boiler mass (without water)	(kg)	30			
Safety valve	(bar)	3			
Max. operating overpressure	(bar)	2,6			
Min. operating overpressure	(bar)	0,3			
Division of power levels	(kW)	3x2	6x1,5	6x2	6x2,7
Main/Return flow	(G)	DN20			
Connection voltage	(V/Hz)	3/4"			
Boiler dimensions (LxWxH)	(mm)	452x1260x132			
Energy efficiency class		D			

EI-Cm Professional		21	36
Heat output	(kW)	21,6	36
Expansion vessel	(lit.)	8	10
Max. operating overpressure	(bar)	2,6	9
Safety thermostat	(°C)	95	95
Safety valve	(bar)	3	3
Boiler mass	(kg)	52	54
Boiler dimensions (LxWxH)	(mm)	600x510x1120	600x510x1120
Noise level (interior)	(db)	32	35
Energy efficiency class		D	D

Container boiler rooms CKK

Hot water container boiler rooms

Container boiler rooms **CKK** are intended for installation in hot water central heating systems and preparation of domestic hot water for buildings as a temporary or permanent solution.

Depending on the requirement, oil boilers with a capacity of 18 to 2.100 kW or biomass boilers with a capacity of 12 to 340 kW can be installed in container boiler rooms.

The boiler rooms are equipped with all the necessary equipment so that, in addition to the connection to the central heating installation and the installation of chimneys, it is necessary to provide electrical and plumbing connections and fuel.

Compact design ensures easy operation, maintenance and relocation of the boiler room from one location to another.

The boiler room is thermally insulated and made in accordance with ISO 9001 and ISO 14001.



OIL



WOOD PELLETS



WOOD CHIPS



CHOPPED WOOD, UP TO 0,5 m



WOOD BRIQUETTES



Characteristics of container boiler rooms

- They are intended for connection to hot water central heating systems with operating temperatures up to 110/70 °C and 90/70 °C and operating pressures of 2,5, 3, 4 or 6 bar.
- Oil boilers with a capacity of 18 to 2.100 kW or biomass boilers with a capacity of 12 to 340 kW can be installed in boiler rooms.
- The degree of automation of the heating process management depends on the requirement, and the solutions offered can meet all the requirements in the field of heating.
- The boiler room can be moved to the installation site by standard means in road, rail or water transport.
- According to the wishes of the investor and the needs of the installation, it is possible to install different controllers, buffer tanks, different sizes of fuel storage, container insulation...
- Standard container size 20 ft, 40 ft HC or custom made container.
- Possibility of connecting several container boiler rooms in one heating system.

It is known that in new residential areas, it is not advisable to install large central boiler rooms at the beginning of construction, because they remain underused for several years. The construction of smaller residential blocks is often accompanied by the construction of associated boiler rooms, which are most often in operation only after a joint technical inspection.

On the other hand, the construction of roads, highways, various supporting facilities, etc. often involves a request for temporary heating, for which the construction of permanent boiler rooms is not cost-effective.

The most practical solution for such cases is to install a portable container boiler room or several of them in a series.





CKK-U 18-2.100 kW

DELIVERY OPTIONS

Container boiler rooms on fuel oil



OIL

- Standard containers up to 40 ft HC or custom
- Boiler power: od 18 - 2.100 kW
- Hot water boiler with oil burner
- Heating oil tank
- All necessary safety elements
- Built-in digital boiler controller by outdoor temperature
- Built-in hydraulic crossover and/or DHW tank
- Insulated pipelines, boiler water preparation, elements according to the investor's wishes

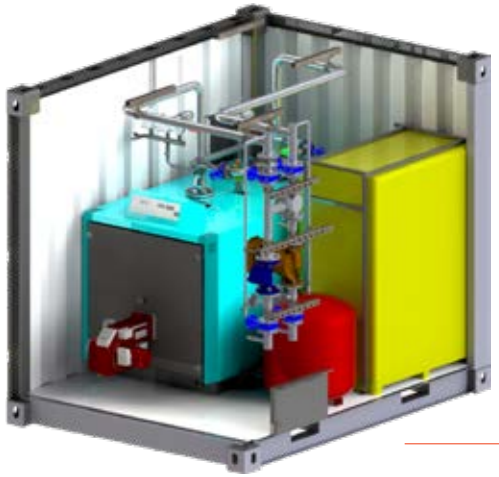

CKK-U

CKK-P 12-320 kW

DELIVERY OPTIONS

Container boiler rooms on wood pellets



WOOD PELLETS

- Standard containers up to 40 ft HC or custom
- Boiler power: from 12 to 320 kW
- Hot water boiler with pellet burner, automatic boiler cleaning and ash extraction from the boiler
- Pellet tank with delivery in the same or separate container
- All necessary safety elements
- Insulated pipelines, boiler water preparation, elements according to the investor's wishes
- Built-in digital boiler controller controlled by outdoor temperature
- Built-in hydraulic crossover or buffer tank and DHW tank

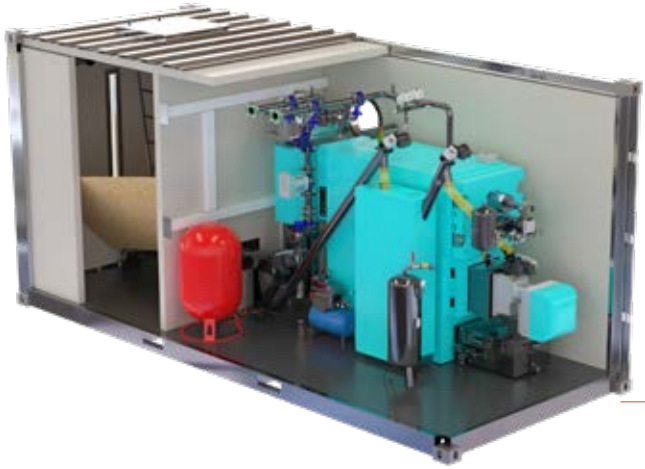

CKK-P



CKK-S 48-340 kW

DELIVERY OPTIONS

Container boiler rooms for wood chips/pellets



WOOD CHIPS



WOOD PELLETS

- Standard containers up to 40 ft HC or custom-made
- Boiler power: from 48-340 kW
- Hot water boiler with rotating (48-96 kW) or moving grate (170-340 kW), automatic boiler cleaning and ash removal from the boiler
- Ash removal from the boiler
- Wood chip tank in a separate container or external tank
- All necessary safety elements
- Insulated pipelines, boiler water preparation, elements according to the investor's wishes
- Built-in hydraulic switch or accumulation tank and DHW tank

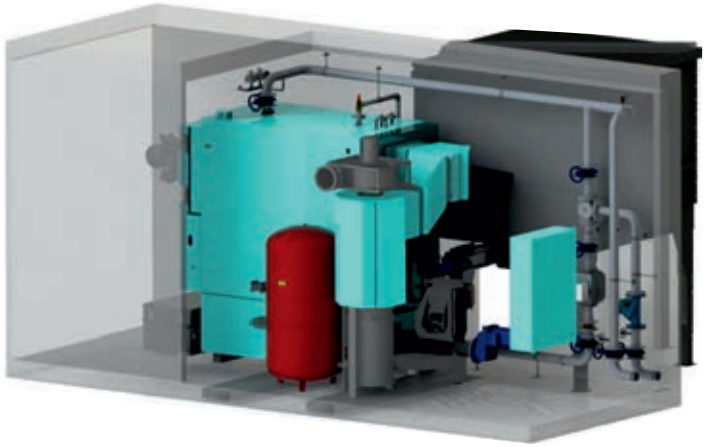

CKK-S



SKB-Digi and LKB-Digi

SKB-Digi

LKB-Digi

Combined stainless steel water heaters

Combined hot water tanks **SKB Digi** volume **80, 100** and **120 liters** and **LKB Digi** volume **100** and **120 liters** with built-in digital controller are intended for heating and storage of domestic hot water in households, restaurants and other facilities where there is a need for domestic hot water.

The possibility of choosing domestic hot water heating by a boiler circuit connected to a tube heat exchanger or a built-in electric heater makes these tanks very interesting.

A special advantage of these tanks is the uniform flow and pressure of domestic hot water, regardless of the number of currently active outlets, which means that, for example, someone's use of domestic hot water will not interrupt your enjoyment in the shower.

The tanks are made of stainless steel, which guarantees high hygienic conditions.

They are recognizable by the successful combination of modern technologies and quality building materials with ease of installation and use. A range of proven technical solutions makes these tanks safe and reliable in operation.

They are made in accordance with ISO 9001 and ISO 14001.



SKB-Digi

LKB-Digi

iNOX

Characteristics of SKB-Digi and LKB-Digi water heaters

- Combined hot water heaters SKB Digi volume 80, 100 and 120 liters and LKB Digi volume 100 and 120 liters.
- Possibility of choosing to heat domestic hot water using a boiler circuit connected to the boiler's tube exchanger or a built-in electric heater.
- They are intended for wall mounting in **vertical** (SKB Digi) or **horizontal** (LKB Digi) installation.
- They are made in two variants: with connections to the central heating installation and a circulation connection on the **left** or **right** side.
- They are made of quality stainless steel, which guarantees high hygienic conditions.
- The accumulated amount of domestic hot water enables uniform flow and pressure of domestic hot water regardless of the number of currently active discharge points.
- The large surface and thin wall of the built-in tube heat exchanger allows fast heating of domestic hot water in the water heater, and the possibility of heating the total amount of water to a temperature above 60 °C prevents the formation of legionella.
- High-quality digital water heater controller enables precise setting of the desired temperature and selection of the method of heating domestic hot water, either with electricity or boiler.
- Possibility to switch on anti-freeze mode.
- They are thermally insulated with mineral wool on Al foil and heat losses due to good and effective insulation are very small.
- The possibility of installing recirculation allows the constant presence of hot water at the outlet and eliminates the need to discharge a certain amount of water before the hot water begins to flow.



SKB-Digi



LKB-Digi



Water heaters made of stainless steel



Digital controller



Water heater delivery



Connection to plumbing installation

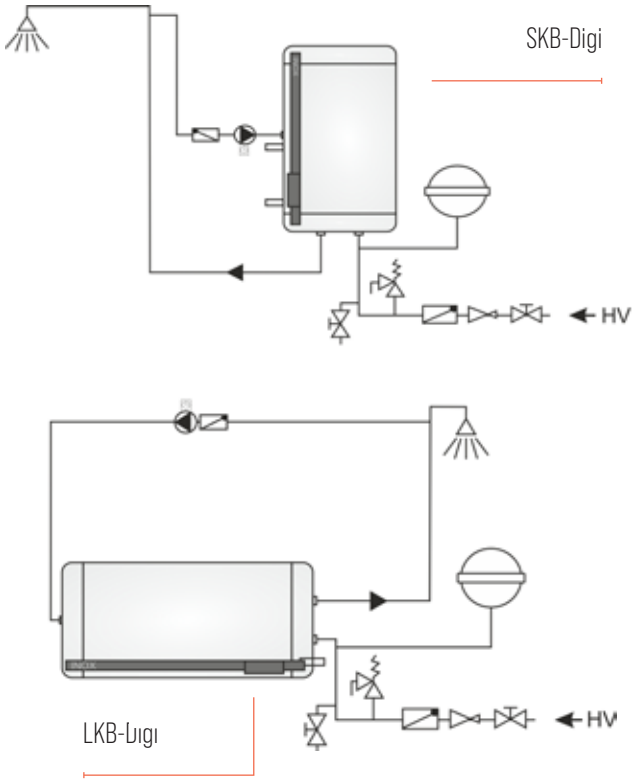

Cross section and water heater parts

SKB-Digi

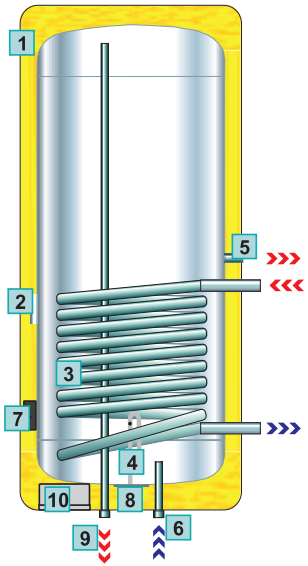

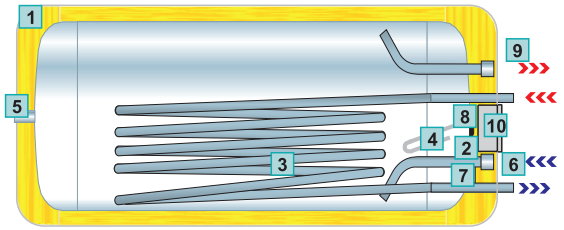

LKB-Digi

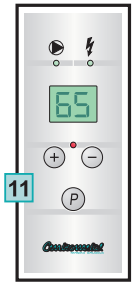

1	Thermal insulation
2	Temperature sensor sleave
3	Tube heat exchanger
4	Electric heater
5	Recirculation
6	Cold DHW connection
7	Safety thermostat
8	Cleaning opening
9	Hot DHW connection
10	Ordinally terminal and electronics
11	Control panel

Basic dimensions - SKB Digi

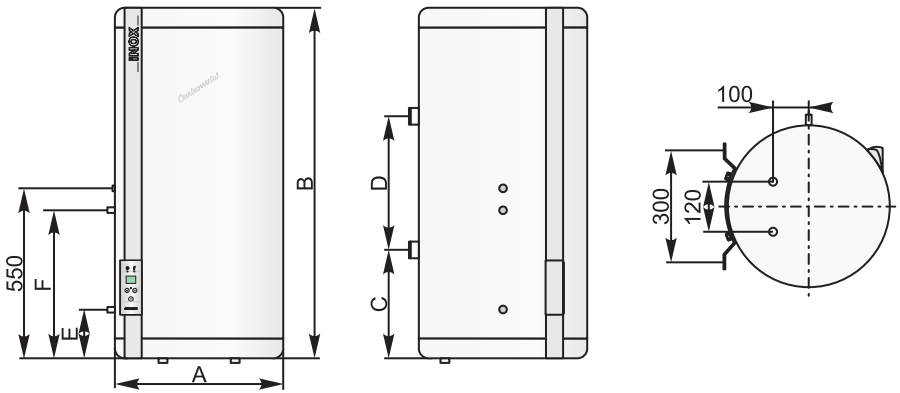

SKB-Digi		80	100	120
Volume	(lit.)	80	100	120
Water heater diameter (A)	Ø (mm)	475	475	475
Water heater length (B)	(mm)	815	955	1090
Height (C)	(mm)	262	262	262
Height (D)	(mm)	300	415	565
Height (E)	(mm)	180	180	180
Height (F)	(mm)	450	450	450
Tube heat exchanger	(m^2)	0,38	0,42	0,42
Tube heat exchanger-connection	(R)	3/4"	3/4"	3/4"
Cold water supply	(R)	1/2"	1/2"	1/2"
Hot water outlet	(R)	1/2"	1/2"	1/2"
Recirculation	(R)	1/2"	1/2"	1/2"
Supply voltage	(V~)	230	230	230
Connection voltage	(kW)	2	2	2
Mass	(kg)	31	35	40
Max. operating overpressure	(bar)	6	6	6
Energy efficiency class		C	C	C

Basic dimensions - LKB Digi

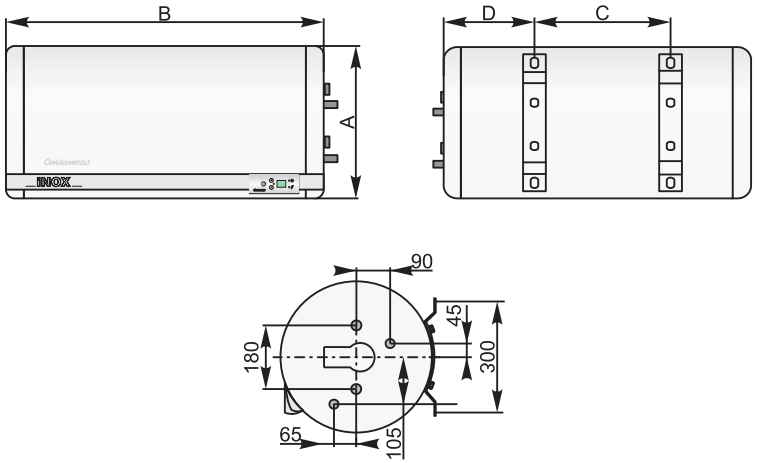

LKB-Digi		100	120
Volume	(lit.)	100	120
Water heater diameter (A)	Ø (mm)	475	475
Water heater length (B)	(mm)	950	1090
Length (C)	(mm)	415	553
Length (D)	(mm)	272	272
Tube heat exchanger	(m^2)	0,42	0,42
Tube heat exchanger-connection	(R)	3/4"	3/4"
Cold water supply	(R)	1/2"	1/2"
Hot water outlet	(R)	1/2"	1/2"
Recirculation	(R)	1/2"	1/2"
Supply voltage	(V~)	230	230
Connection voltage	(kW)	2	2
Water heater mass	(kg)	40	40
Max. operating overpressure	(bar)	6	6
Energy efficiency class		C	C

TB

Heating and accumulation of domestic hot water

Hot water **stainless steel** water heaters type **1TB 120** to **850** are intended for heating and accumulating domestic hot water by connecting to the boiler circuit in the boiler room or to some other heat source within a technological process.

They are often installed with solar systems as an additional accumulation with solar stainless steel water heaters STB. The water heaters are made of high-quality stainless steel, which guarantees high hygienic conditions.

The use of modern technologies and proven technical solutions enables a high heat transfer coefficient and negligible losses to the environment.

They are manufactured in accordance with ISO 9001 and ISO 14001 standards.



TB 200-850

TB 120-150

iNOX

TB water heater characteristics

- Hot water stainless steel water heaters type TB 120, 150, 200, 300, 600 and 850 are intended for heating and accumulating domestic hot water by connecting to the boiler circuit or to another heat source within a technological process.
- They are suitable for installation in solar systems, as additional accumulation with solar stainless steel water heaters STB.
- The water heaters are made of high-quality stainless steel, which guarantees high hygiene conditions.
- Due to the rapid heating by the large heating surface of the tube exchanger, they provide the comfort of large quantities of hot water.
- In the TB 120 and 150 water heaters, the connections are located on the top, while in the TB 200, 300, 600 and 850 water heaters, the connections are on the back of the water heater, which allows for simple and quick connection to the installation.
- It is possible to install a sensor in the designated place on the back of the water heater.
- 80 mm thick insulation effectively protects the boiler from heat loss.
- Possibility of installing an electric heater (TB 200 - 850).

TB cross section

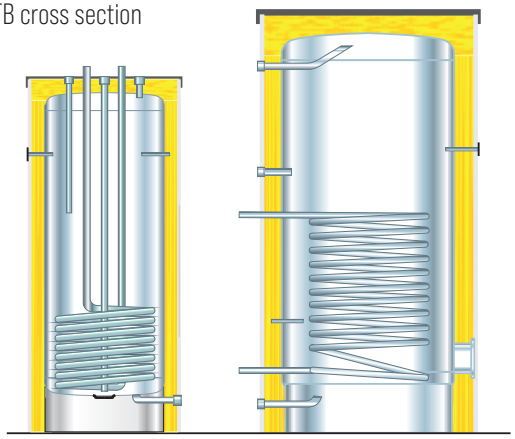

TB 120-150

TB 200-850



Thermometer



Connections from above
TB 120-150



Delivery in wooden packaging



Connections on the back
TB 200-850





Connection to plumbing installation and the boiler

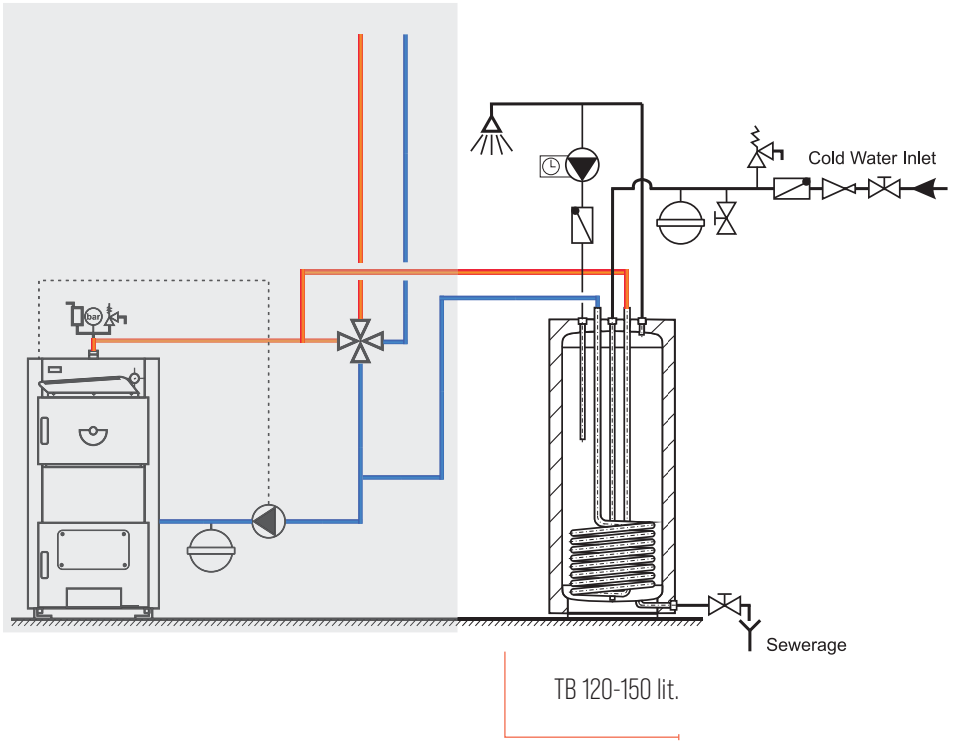

TB 120-150 lit.

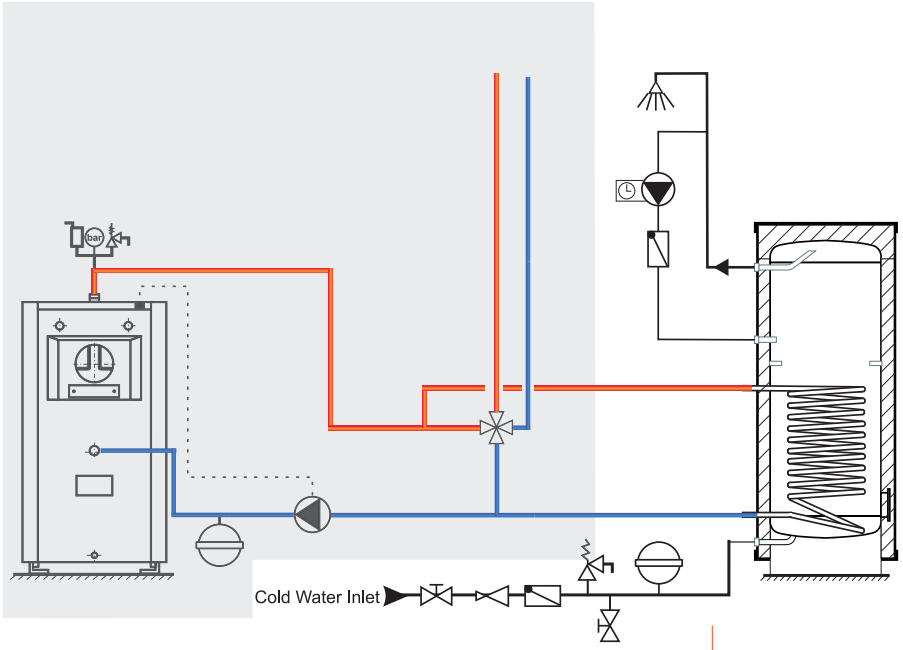

TB 200-850 lit.

Technical data

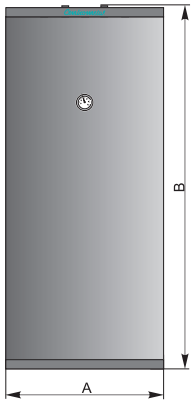

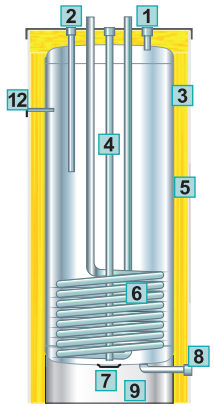

TB 120-150

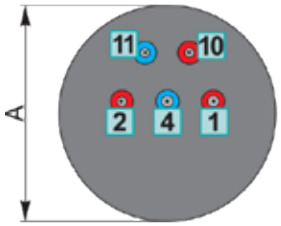

TB 200-850

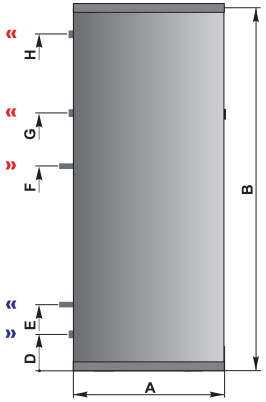

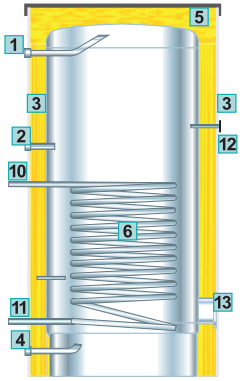

TB		120	150	200	300	600	850
Volume	(lit.)	121	150	200	294	545	860
Max. heat exchanger (1) 80 °C	(kW)	16,6	21,0	33,1	52,6	82,9	124,0
performance	(l/h)	408	515	814	1297	2045	3067
70 °C	(kW)	13,3	19,0	26,7	39,5	63,0	94,5
	(l/h)	330	417	658	975	1554	2331
60 °C	(kW)	8,3	10,5	16,5	24,5	39,0	58,5
	(l/h)	204	257	406	604	962	1443
Water heater water flow	(m^3/h)	1,5	1,5	1,5	5,0	5,0	5,0
Tube heat exchanger	(m^2)	0,42	0,53	0,84	1,3	2,1	3,15
Tube heat exchanger water content	(lit.)	1,9	2,4	2,8	7,2	11,6	17,5
Water heater mass	(kg)	30	41	46	63	129	157
Outer diameter (A)	Ø (mm)	640	640	640	640	810	960
Water heater height (B)	(mm)	970	1125	1450	1900	1995	1940
Heights (D/E/F)	(mm)	92/-/-	92/-/-	92/300/810	92/300/950	100/390/1100	72/325/1075
Heights (G/H)	(mm)	-	-	920/1150	1060/1650	1200/1710	1375/1640
Cold / hot water connection	(R)	3/4"	3/4"	3/4"	3/4"	5/4"	5/4"
Max. operating DHW overpressure	(bar)	6	6	6	6	6	6
Max. operating heating medium overpressure	(bar)	6	6	6	6	6	6
Energy efficiency class	L	C	C	C	C	C	C

(1) Inlet temperature heating medium 80,70,60 °C; DHW 10/45 °C

1	Hot DHW connection
2	Recirculation
3	Temp. sensor location
4	Cold DHW connection
5	Thermal insulation
6	Tube heat exchanger
7	Cleaning opening (TB 120-150)
8	Water heater drain connection
9	Water heater stand
10	Water heater heating medium connection - flow
11	Water heater heating medium connection - return
12	Thermometer
13	Cleaning opening (TB-200-850)

BW

Heating and accumulation of domestic hot water

Hot water **enamelled** water heaters type **BW 200 to 1.000** are intended for heating and accumulating consumable hot water by connecting to the boiler circuit in the boiler room or to another heat source within a technological process.

They are often installed next to solar systems as additional storage with BE solar boilers.

Boilers are made of black steel and double-layered enamelled according to DIN 4753, which guarantees high hygienic conditions. By using modern technologies and proven technical solutions, a high coefficient of heat transfer and negligible losses to the environment are possible.

They are made in accordance with the ISO 9001 and ISO 14001 standards.



ENAMELLED

BW water heater characteristics

- Hot water stainless steel water heaters type BW 200, 300, 400, 500, 800 and 1.000 are intended for heating and accumulating domestic hot water by connecting it to a boiler circuit or to another heat source within a technological process.
- They are suitable for installation in solar systems, as an additional accumulation with solar enamelled BE water heaters.
- The water heaters are made of high-quality steel, double-layered enamelled according to DIN 4753, which guarantees high hygiene conditions.
- Due to the rapid heating of the large heating surface of the tube exchanger, they provide the comfort of large quantities of hot water.
- The connections are on the back of the water heater, which allows for simple and quick connection to the installation.
- Insulation with a thickness of 50 mm (200-500) and 100 mm (800-1.000) effectively protects the water heater from heat loss.

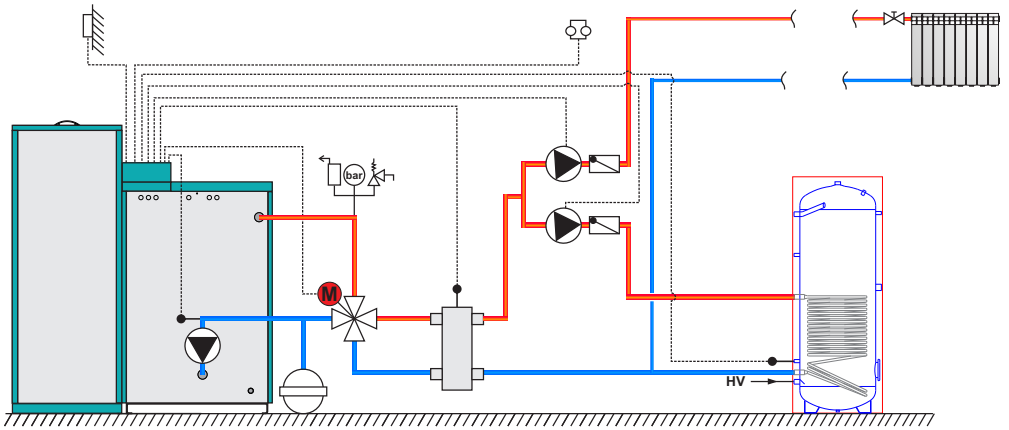

Example of system installation

BW		200	300	400	500	800	1000
Volume	(lit.)	196	273	400	475	738	930
Water heater height	(mm)	1215	1615	1475	1705	1875	2205
Water heater diameter	Ø (mm)	600	600	750	750	990	990
Heat exchanger surface area	(m^2)	0,7	1,2	1,4	1,8	2,0	2,4
Water heater water flow	(lit.)	5,6	7,9	9,2	11,4	12,6	15,1
Max. heat exchanger performance	(kW)	19	29	34	43	50	60
Cold/hot water connection	(R)	1"	1"	1"	1"	5/4"	5/4"
Heating medium flow (heat exchanger)	(m^3/h)	0,8	1,2	1,5	1,8	2,2	2,6
Pressure heat exchanger	(mbar)	14	32	70	105	190	480
Maximum operating temperature	(°C)	95	95	95	95	95	95
Maximum operating overpressure	(bar)	10	10	10	10	10	10
Mass	(kg)	77	93	113	128	190	220
Energy efficiency class		C	C	C	C	C	C

BW cross section

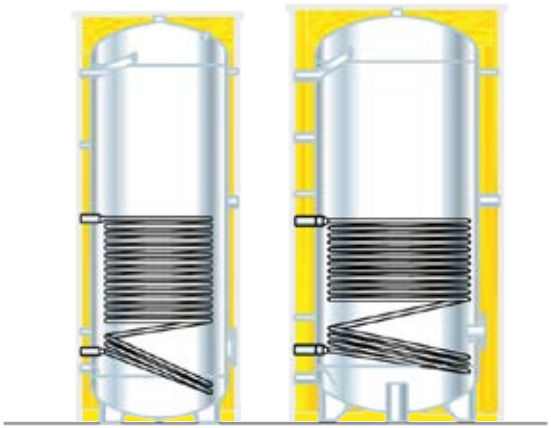

BW 200-500

BW 800-1.000



WW

Heating and accumulating domestic hot water

Hot water **enamelled** water heaters type **WW 1.500 to 2.000** are intended for heating and accumulating domestic hot water via connection to a heat source within a heating system or technological process.

The water heaters are made of black steel and double-layered enamelled according to DIN 4753, which guarantees high hygienic conditions. The use of modern technologies and proven technical solutions enables a high heat transfer coefficient and negligible losses to the environment.

They are manufactured in accordance with ISO 9001 and ISO 14001.



ENAMELLED

WW water heater characteristics

- Hot water enamelled heaters type BW 1.500 and 2.000 are intended for heating and accumulating domestic hot water via connection to a heat source within a heating system or technological process.
- The boilers are made of high-quality steel, double-layer enamelled according to DIN 4753, which guarantees high hygiene conditions.
- Due to the rapid heating with a large heating surface of the tube exchanger, they provide the comfort of large quantities of hot water.
- The connections are on the back of the boiler, which allows for simple and quick connection to the installation.
- 100 mm thick insulation (1.500-2.000) effectively protects the boiler from heat loss.

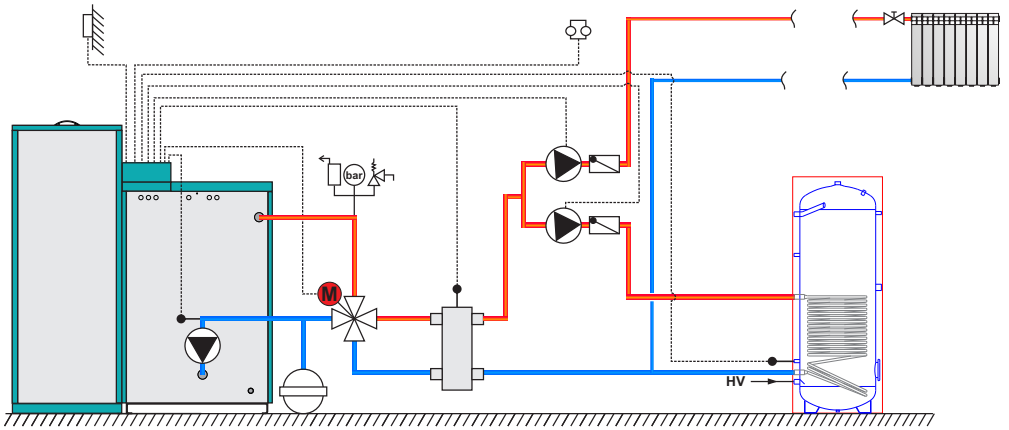

Example of system installation

WW		1500	2000
Volume	(lit.)	1500	1950
Water heater height	(mm)	2185	2470
Diameter heater with insulation	Ø (mm)	1200	1300
Heat exchanger surface area	(m^2)	3,6	4,3
Exchanger water volume	(lit.)	21	26
Max. heat exchanger performance	(kW)	94	112
Cold/hot water connection	(R)	5/4"	5/4"
Heating medium flow (heat exchanger)	(m^3/h)	0,8	1,2
Pressure heat exchanger	(mbar)	4	5
Maximum operating temperature	(°C)	95	95
Maximum operating overpressure	(bar)	10	10
Mass	(kg)	335	503
Energy efficiency class		C	C

WW cross section

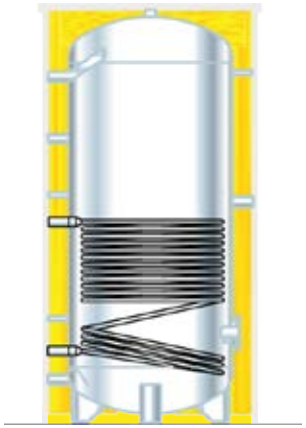

WW 1.500-2.000



STB

Bivalent solar stainless steel water heaters

Bivalent solar **stainless steel** water heaters type **STB 200 to 850** are intended for heating and accumulating drinking water using solar energy and other energy sources.

The water heaters are made of stainless steel, which guarantees high hygienic conditions.

The use of modern technologies and proven technical solutions enables the economical use of available energy sources. When using a solar system, Cm-SOL digital solar controller is recommended.

They are made in accordance with ISO 9001 and ISO 14001.



STB water heater characteristics

- Hot water bivalent solar stainless steel boilers type STB 200, 300, 600 and 850 are intended for heating domestic hot water using solar energy and boiler water.
- They are made of quality stainless steel, which guarantees high hygienic conditions.
- The connectors are located on the back, which allows easy and quick connection to the installation.
- 80 mm thick insulation effectively protects the water heater from heat losses.

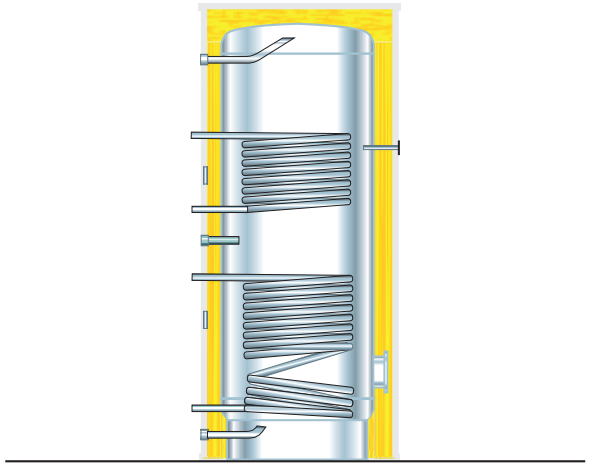

STB cross section



Thermometer



High quality skay insulation



Connection to the installation

Delivery

– Bivalent solar stainless steel water heater in wooden packaging



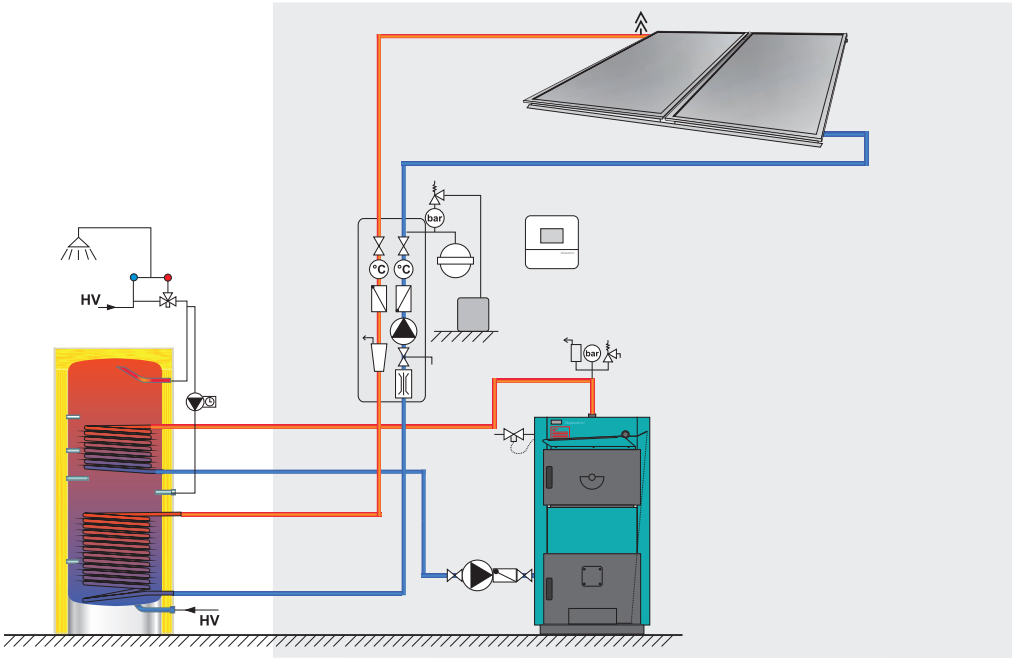

Technical data

STB		200		300		600		850	
Volume	(lit.)	198		283		537		850	
Water heater height (C)	(mm)	1420		1900		1995		1940	
Water heater diameter (A)	Ø (mm)	640		640		810		960	
Heights (D/E/F/G)	(mm)	90/295/695/775		90/295/865/965		75/330/985/1085		70/320/1075/1375	
Heights (H/I/J)	(mm)	855/1055/1145		1065/1345/1645		1185/1585/1725		1270/1540/ 1635	
Water heater diameter without insulation	Ø (mm)	480		480		650		800	
Water heater depth (B)	(mm)	690		690		860		1000	
Tube heat exchanger	(-)	upper	lower	upper	lower	upper	lower	upper	lower
Max. heat exchanger[1] 80 °C	(kW)	16,1	33,1	19,5	37,4	37,6	63,7	53,1	83,8
performance	(l/h)	395	814	479	916	922	1561	1299	2053
70 °C	(kW)	13,3	26,7	16,0	28,5	28,9	49,7	40,7	66,3
	(l/h)	325	658	391	697	707	1216	997	1624
60 °C	(kW)	8,0	16,5	10,1	18,1	18,4	32,5	26,4	44,5
	(l/h)	195	406	247	443	450	796	646	1090
Heating medium flow	(m^3/h)	1,5	1,5	3	1,5	3	1,5	3	1,5
Tube heat exchanger surface	(m^2)	0,42	0,83	0,53	1,06	1,06	2,12	1,59	3,17
Cold sanitary water[2]	(R)	3/4"		3/4"		5/4"		5/4"	
Hot sanitary water[2]	(R)	3/4"		3/4"		5/4"		5/4"	
Recirculation[2]	(R)	3/4"		3/4"		5/4"		5/4"	
Heat exchanger connections (boiler and solar)[3]	(R)	3/4"		1"		1"		1"	
Maximum operating overpressure	(bar/MPa)	6/0,6		6/0,6		6/0,6		6/0,6	
Mass	(kg)	49		66		125		162	
Energy efficiency class	L	C		C		C		C	

(1) Inlet temperature heating medium 80,70,60 °C; DHW 10/45 °C (2) Inner thread (3) Outer thread-hermeto coupling Ø 22-3/4" for STB-200, and Ø 28-1" for STB-300, STB-600 and STB-850

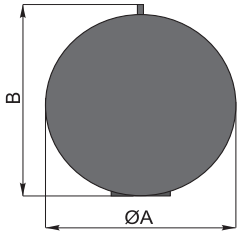

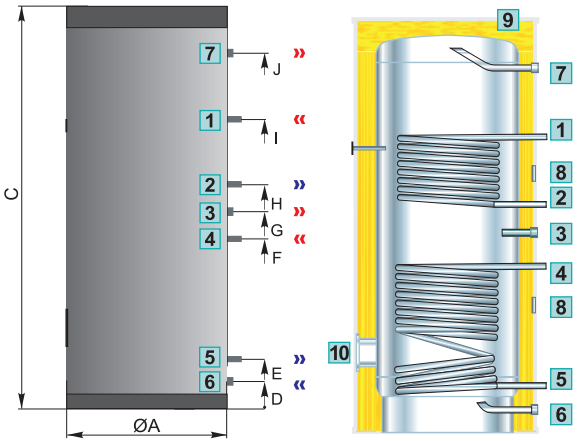

1	Boiler water supply
2	Boiler water return
3	Recirculation 3/4"
4	Collector water supply
5	Collector water return
6	Cold DHW 3/4" and 5/4"
7	Hot DHW 3/4" and 5/4"
8	Temperature sensors sleeves
9	Thermal insulation
10	Flange 115/180 mm

BE

Hot water enamelled solar water heaters

Bivalent solar **enamelled** water heaters type **BE 200, 300, 400, 500, 800 and 1.000** are intended for heating and accumulating domestic water using solar energy, reheating with boiler water and alternatively reheating with an electric heater.

They are made using the latest robotic welding technology with high-quality materials, which ensures long-lasting operation, high efficiency and minimal heat loss.

Thanks to excellent insulation and optimized heat transfer, they are ideal for households, boiler rooms and solar systems.

They are made in accordance with DIN 4753.



ENAMELLED

BE water heater characteristics

- Hot water enamelled solar enamelled water heaters type BE 200, 300, 400, 500, 800 and 1.000 are intended for heating domestic hot water using solar energy, boiler water and alternatively an electric heater.
- They are made of high-quality steel, double-layered enamelled according to DIN 4753 and are manufactured in accordance with the European standard EN 12897.
- The connections are located on the back, which allows for easy and quick connection to the installation.
- Insulation with a thickness of 50 mm (200-500) and 100 mm (800-1.000) effectively protects the water heater from heat loss.

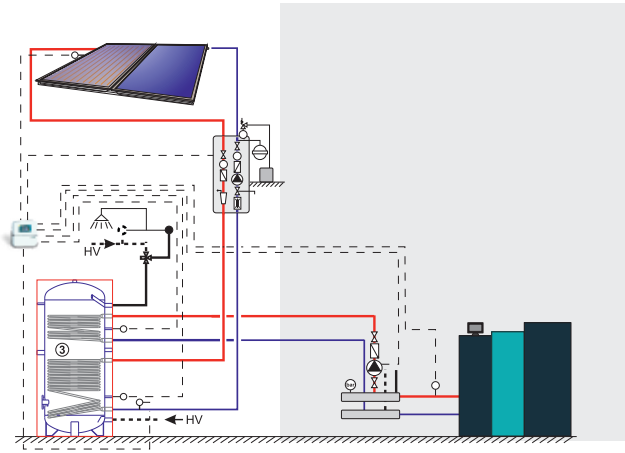

Example of system installation

BE		200	300	400	500	800	1000
Volume	(lit.)	196	273	400	475	738	930
Height with insulation	(mm)	1215	1615	1475	1705	1875	2205
Diameter heater with insulation	Ø (mm)	600	600	750	750	990	990
Surface area of upper exchanger	(m^2)	0,5	0,8	0,9	0,9	1,2	1,2
Surface area of lower exchanger	(m^2)	0,7	1,2	1,4	1,8	2,0	2,4
Water volume of upper exchanger	(lit.)	2,6	4,1	7,0	5,6	7,0	7,0
Water volume of lower exchanger	(lit.)	5,6	7,9	9,2	11,4	12,6	15,1
Heat output (upper exchanger)	(kW)	12	19	21	23	30	30
Heat output (lower exchanger)	(kW)	19	29	34	43	50	60
Cold/hot water connection	(R)	1"	1"	1"	1"	5/4"	5/4"
Heating medium flow (upper exchanger)	(m^3/h)	0,5	0,8	0,9	1,0	1,3	1,3
Heating medium flow (lower exchanger)	(m^3/h)	0,8	1,2	1,5	1,8	2,2	2,6
Pressure drop (upper exchanger)	(mbar)	6	10	12	14	60	60
Pressure drop (lower exchanger)	(mbar)	14	32	70	105	190	480
Maximum operating temperature	(°C)	95	95	95	95	95	95
Maximum operating overpressure	(bar)	10	10	10	10	10	10
Mass	(kg)	83	112	127	151	210	235
Energy efficiency class	L	C	C	C	C	C	C

BE cross section

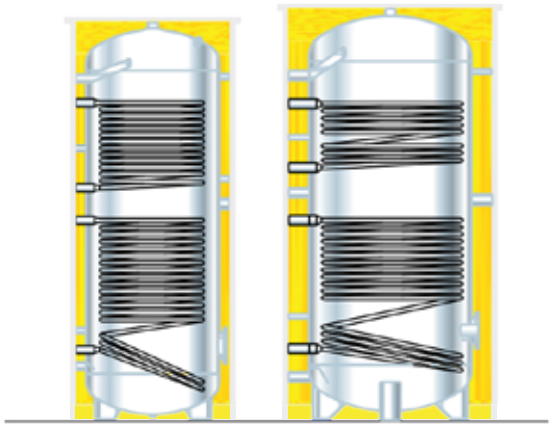

BE 200-500

BE 800-1.000



EP

Hot water enamelled solar water heaters

Bivalent solar **enamelled** water heaters type **EP 1.500 and 2.000** are intended for heating and accumulating domestic water using solar energy, reheating with boiler water and alternatively reheating with an electric heater.

They are made using the latest robotic welding technology with high-quality materials, which ensures long-lasting operation, high efficiency and minimal heat loss.

Thanks to excellent insulation and optimized heat transfer, they are ideal for households, boiler rooms and solar systems.

They are made in accordance with DIN 4753.



ENAMELLED

EP water heater characteristics

- Hot water enamelled solar enamelled water heaters type EP 1.500 and 2.000 are intended for heating domestic hot water using solar energy, boiler water and alternatively an electric heater.
- They are made of high-quality steel, double-layered enamelled according to DIN 4753 and are manufactured in accordance with the European standard EN 12897.
- The connections are located on the back, which allows for easy and quick connection to the installation.
- The 100 mm thick insulation (1.500-2.000) effectively protects the water heater from heat loss.

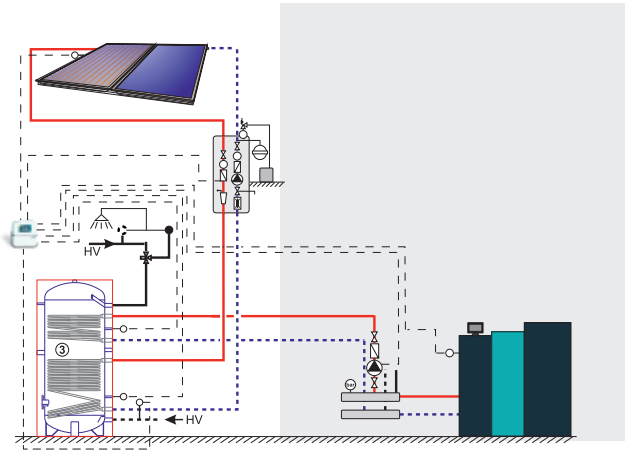

Example of system installation

EP		1500	2000
Volume	(lit.)	1390	1950
Height with insulation	(mm)	2185	2470
Diameter heater with insulation	Ø (mm)	1200	1300
Surface area of upper exchanger	(m^2)	1,8	2,8
Surface area of lower exchanger	(m^2)	3,4	4,6
Water volume of upper exchanger	(lit.)	10,4	16,9
Water volume of lower exchanger	(lit.)	19,5	28,1
Heat output (upper exchanger)	(kW)	47	73
Heat output (lower exchanger)	(kW)	88	120
Cold/hot water connection	(R)	5/4"	5/4"
Heating medium flow (upper exchanger)	(m^3/h)	2,0	3,1
Heating medium flow (lower exchanger)	(m^3/h)	3,8	5,2
Pressure drop (upper exchanger)	(mbar)	80	233
Pressure drop (lower exchanger)	(mbar)	499	1019
Maximum operating temperature	(°C)	95	95
Maximum operating overpressure	(bar)	8	8
Mass	(kg)	350	542
Energy efficiency class	L	C	C

EP cross section

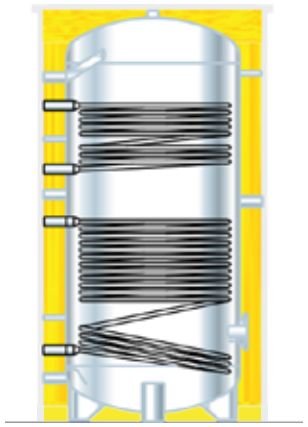

EP 1.500-2.000



WWM

Hot water enamelled boilers for heat pumps

Hot water **enamelled** water heaters type **WWM 200 to 2.000** are intended for heating and accumulating domestic hot water by connecting to a heat pump circuit, boiler or within technological processes. They are often used in solar systems as an additional accumulation with solar water heaters EPM.

They are made of high-quality steel and double-layer enamelled according to DIN 4753, which ensures high hygienic conditions and long-lasting operation.

The use of modern technologies and proven technical solutions enables a high heat transfer coefficient and negligible losses to the environment.

They are manufactured in accordance with ISO 9001 and ISO 14001.



ENAMELLED

WWM water heater characteristics

- Hot water enamelled water heaters type WWM 200, 300, 500, 800, 1.000, 1.500 and 2.000 are intended for heating and accumulating domestic hot water by connecting to a low-temperature source such as a heat pump.
- The water heaters are made of high-quality steel, double-layer enamelled according to DIN 4753, which guarantees high hygiene conditions.
- The large-surface tube exchanger enables good energy transfer even at lower flow temperatures.
- The 50 mm (200-500) and 100 mm (800-2.000) thick insulation effectively protects the water heater from heat loss.

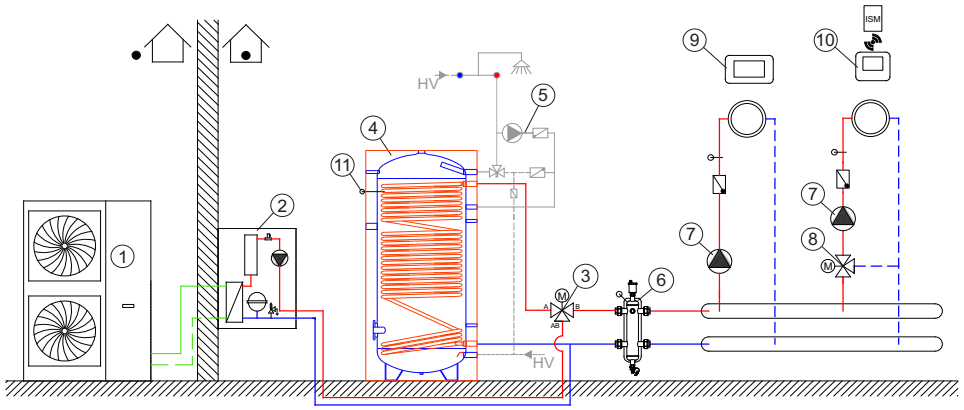

Example of system installation

WWM		200	300	500	800	1000	1500	2000
Volume	(lit.)	196	263	470	702	900	1300	1900
Height with insulation	(mm)	1215	1615	1705	1875	2205	2085	2470
Diameter heater with insulation	Ø (mm)	600	600	750	990	990	1200	1300
Surface area of upper exchanger	(m^2)	3	4	6	7	8	8	13
Water volume of lower exchanger	(lit.)	17,2	23	51,5	60	68,5	68,5	102
Heat output (60 °C/50 °C)	(kW)	14	19	31	38	43	45	68
Heat output (80 °C/60 °C)	(kW)	72	96	156	189	216	225	340
Hot water flow (10 °C/45 °C)	(m^3/h)	0,3	0,5	0,8	0,9	1,1	1,1	1,7
Hot water flow (10 °C/45 °C - DIN 4708)	(m^3/h)	1,8	2,4	3,8	4,6	5,3	5,5	8,4
Cold/hot water connection	(R)	1"	1"	5/4"	5/4"	5/4"	5/4"	5/4"
Pressure drop (60 °C/50 °C)	(mbar)	8	15	31	57	82	95	335
Pressure drop (80 °C/60 °C)	(mbar)	55	14	14	14	14	14	14
Maximum operating temperature	(°C)	95	112	197	354	515	620	2020
Maximum operating overpressure	(bar)	10	10	10	10	10	10	10
Mass	(kg)	90	124	175	235	265	370	573
Energy efficiency class		C	C	C	C	C	C	C

WWM cross section

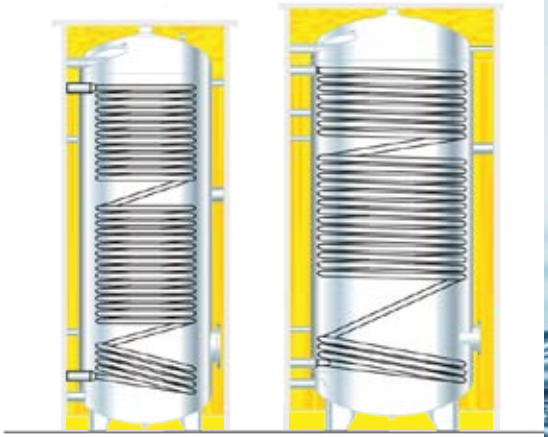

WWM 300-500

WWM 800-2.000

EPM

Enamelled hot water solar water heaters

Bivalent solar **enamelled** water heaters type **EPM 300, 500, 800, 1.000, 1.500 and 2.000** are intended for heating and accumulating domestic hot water using solar energy, with the possibility of reheating with a heat pump or electric heater. Thanks to double tube exchangers, they enable the simultaneous use of multiple energy sources - solar energy, heat pump, electricity, gas or biomass.

They are made using modern robotic welding technology and double-layer enamelled according to DIN 4753, which ensures high hygienic conditions and long-lasting operation.

The use of modern technologies and proven technical solutions enables the economical use of available energy sources.
When using a solar system, the digital solar control Cm-SOL is recommended.

They are made in accordance with ISO 9001 and ISO 14001.



ENAMELLED

EPM water heater characteristics

- Hot water bivalent enamelled solar water heaters type EPM 300, 500, 800, 1.000, 1,500 and 2.000 are intended for heating domestic hot water using solar energy, a low-temperature source such as a heat pump and alternatively an electric heater.
- They are made of high-quality steel, double-layered enamelled according to DIN 4753 and are manufactured in accordance with the European standard EN 12897.
- The upper large-surface tubular exchanger enables good energy transfer even at lower flow temperatures of low-temperature sources.
- Insulation with a thickness of 50 mm (300-500) and 100 mm (800-2.000) effectively protects the water heater from heat loss.

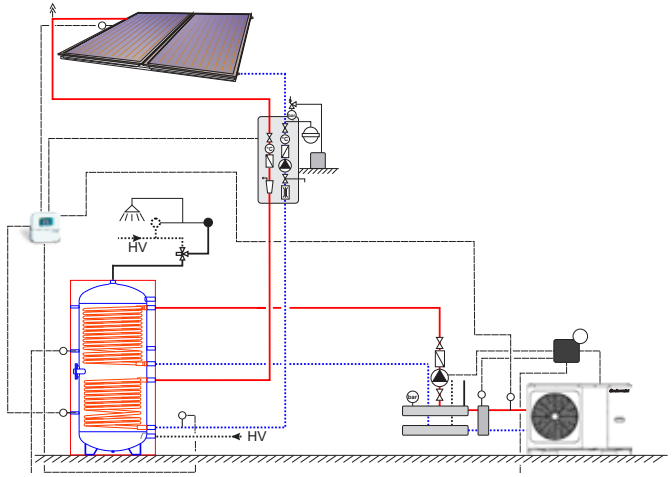

Example of system installation

EPM		300	500	800	1000	1500	2000
Volume	(lit.)	260	455	702	900	1390	1900
Height with insulation	(mm)	500	650	790	790	1000	1000
Diameter heater with insulation	Ø (mm)	600	750	990	990	1200	1300
Surface area of upper exchanger	(m^2)	3,7	5,2	5,2	6,0	6,0	12,0
Surface area of lower exchanger	(m^2)	1,2	1,8	2,4	3,7	3,7	4,3
Water volume of upper exchanger	(lit.)	18	31	31	35	35	68
Water volume of lower exchanger	(lit.)	8	10	14	23	23	26
Heat output (upper exchanger)	(kW)	18	28	30	35	35	70
Heat output (lower exchanger)	(kW)	29	44	30	88	88	103
Cold/hot water connection	(R)	1"	1"	5/4"	5/4"	5/4"	5/4"
Heating medium flow (upper exchanger)	(m^3/h)	1,6	2,4	2,6	3	3	6
Heating medium flow (lower exchanger)	(m^3/h)	0,7	1,1	1,5	2,2	2,2	2,5
Pressure drop (upper exchanger)	(mbar)	31	37	40	45	45	90
Pressure drop (lower exchanger)	(mbar)	17	21	93	215	215	340
Maximum operating temperature	(°C)	95	95	95	95	95	95
Maximum operating overpressure	(bar)	10	10	10	10	10	10
Mass	(kg)	131	182	265	294	395	601
Energy efficiency class		C	C	C	C	C	C

EPM cross section

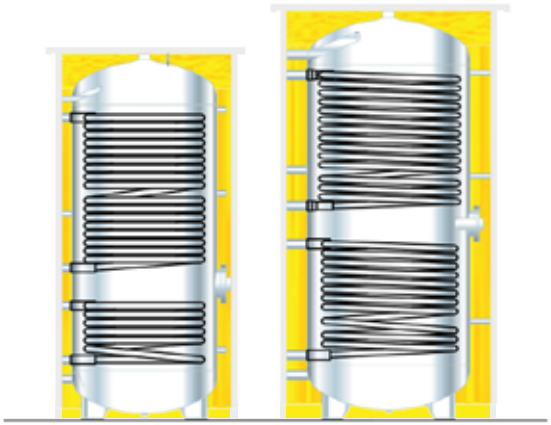

EPM 300-500

EPM 800-2.000

CPK-8203N 4H

Flat plate solar thermal collectors

The **CPK-8203N 4H** series flat plate collectors are a modern product of high quality and modern design. They are intended primarily for domestic hot water heating systems and also for swimming pools and central heating systems with heat accumulation.

Flat plate collectors CPK-8203N 4H are made of quality materials which allows them a long service life in all weather conditions. By using high-performance selective coatings and one absorber plate over the entire collector surface, the best possible heat transfer is achieved based on the maximum use of the collector surface.

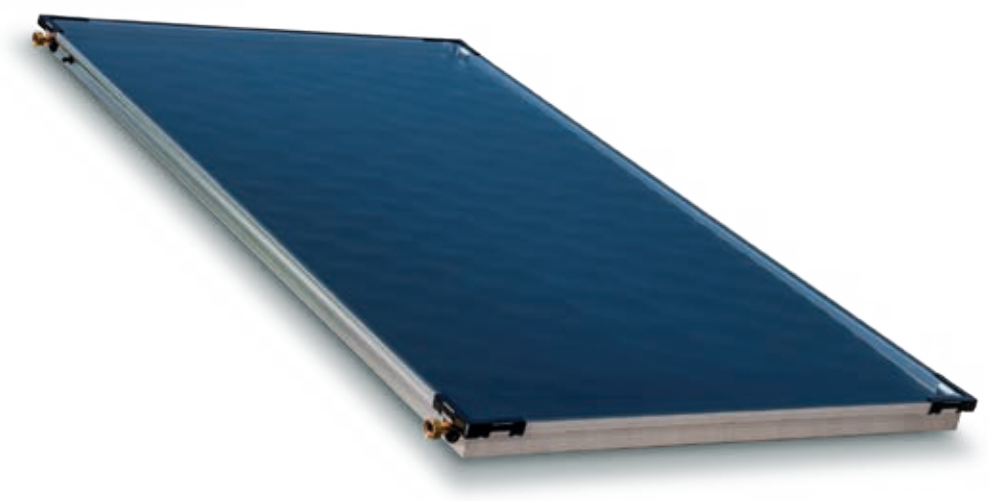

SOLAR ENERGY

CPK-8203N 4H collector characteristics

- In a modern way of laser welding, the register of copper pipes is attached to an aluminium plate that is coated with a high-performance selective coating, which achieves the effect of a thermal plate.
- The aluminium plate is set over the entire surface of the collector, which prevents the occurrence of air turbulence, and thus unnecessary energy losses.
- The pipes inside the collector are in the shape of a harp, which achieves optimal flow through the collector.
- The 3.2 mm thick solar glass is sealed with a rubber seal.
- The collector has 4 connections with 'hermeto' connectors for easier connection.
- The collector can be installed on the roof with the help of a mounting set (additional equipment) and as a free-standing stand on special supports (additional equipment).
- The proven installation system ensures simple, safe and quality installation in the shortest time.
- The collector is designed for mounting in a vertical or horizontal position.
- A maximum of 6 plate collectors are connected in one series, a larger number are connected in parallel.
- The installation of collectors in domestic hot water heating systems (STB, DSFF/E, WPS/E, BE, EP, EPM), pool water and central heating systems (CAS-S, -BS) saves fuel needed for conventional energy sources, which also and pollutes the environment less.
- The collector is Solar Keymark certified and labeled.

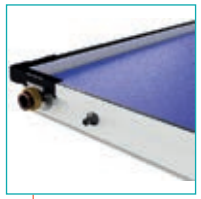

Sensor sleeve and 'hermeto' connection

Solar Keymark



Delivery and obligatory accessories

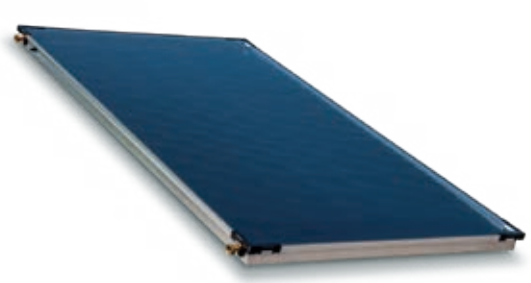

Delivery

– Collector

Obligatory accessories

– Mounting set for 1 or 2 collectors on a pitched or flat roof for vertical or horizontal installation of collectors

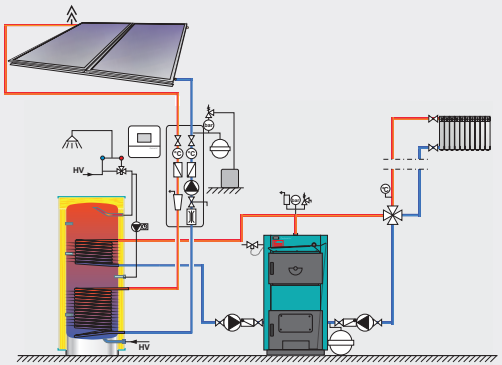

Connection to bivalent DHW tank

– Collector CPK-8203N 4H
– Mounting set for pitched or flat roof
– Solar pump group
– Solar expansion vessel
– Solar bivalent tank (STB, DSFF/E, WPS/E, BE, EP, EPM)
– Solar controller (Cm-SOL) with sensors

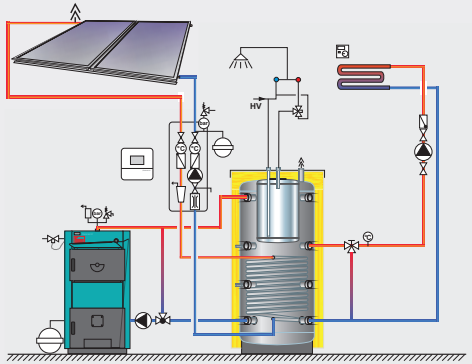

Connection to the combined tank for summer DHW heating

– Collector CPK-8203N 4H
– Mounting set for pitched or flat roof
– Solar pump group
– Solar expansion vessel
– Solar controller with sensors (Cm-SOL)
– Combined storage tank (CAS-S, CAS-BS)

Technical characteristics



Flat roof mounting



Pitched roof mounting



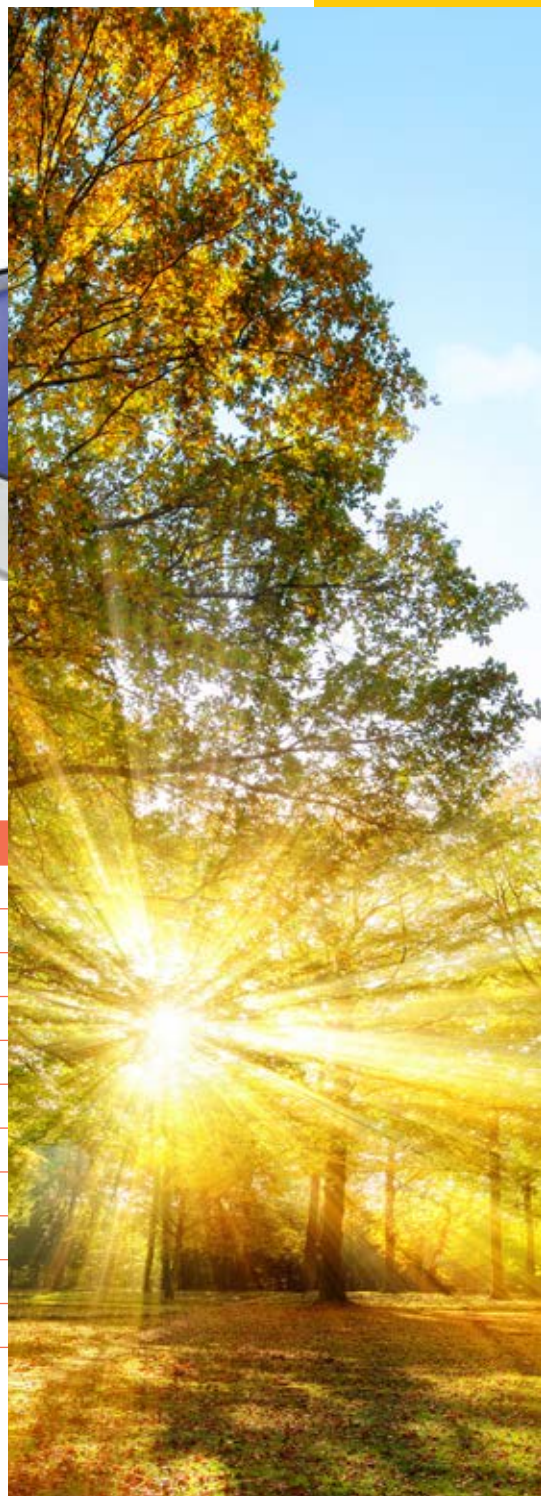

CPK-8203N 4H		
Gross area	(m²)	2,02
Aperture area	(m²)	1,84
Absorber area	(m²)	1,84
Absorber material	(-)	Al sheet selective coated
Absorption coefficient	(%)	95
Emission coefficient	(%)	5
Pipe register	(mm)	f8
Pipe manifold	(mm)	f22
Absorber volume	(lit.)	1,56
Glass	(-)	3,2 mm tempered solar glass
Transmittance of the glass	(%)	90

Number of connections	(-)	4x with hermeto couplings
Connections	(R)	1"
Max. operating overpressure	(bar)	10
Max. stagnation temperature	(-)	192°C under norm conditions
Insulation	(-)	40 mm mineral wool
Height	(mm)	1,730
Width	(mm)	1,170
Depth	(mm)	83
Collector mass	(kg)	31
Fluid	(-)	mixture of propylene glycol and water
Approved mounting angle	(-)	min. 15°, max. 75°

SOLAR PUMP GROUP CSPG TL-6600

Solar system parts

An important element of solar systems are solar pump groups **CSPG TL-6600**. The **CSPG TL-6600** solar pump group contains all the necessary elements for the proper circulation of solar fluid through the solar system. In addition to having all the necessary functional and safety elements in one place, solar pump groups are thermally and soundproof insulated, require little space and are easy to install.

If we have an additional storage tank, in addition to the solar pump group CSPG TL-6600, we need to install a **3-way diverting valve** (zone valve) that can expand the solar system.

If we want to simply run the solar system over 2 temperatures, we can install a **differential thermostat**. It can be used to select automatic or manual operation, the thermostat on/off range of 0-20 °C can be set. It is supplied with all necessary sensors.



Elements of the solar pump group CSPG TL-6600

- 2 thermometers
- Pressure gauge
- Safety valve, 6 bar
- Circulating pump Grundfos Solar UPM3 15-75
- Filling/draining valves
- Flow regulator (2-12 lit./min.)
- Hermeto connection f22mm
- Filling/draining connections R 3/4" joint with seal
- Manual airvent
- Expansion vessel connection
- Two-part insulating foam

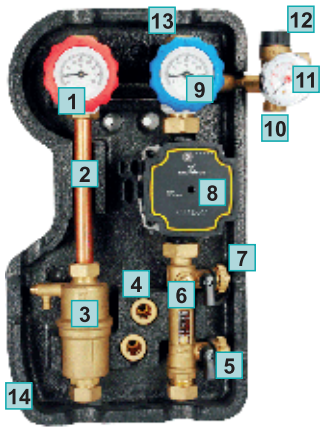

1	Thermometer with ball valve
2	Flow pipe
3	Manual airvent
4	Connections for filling/ draining hoses
5	Drain connection
6	Flow meter 2-12 lit/min.
7	Filling connection
8	Pump
9	Thermometer with non-return valve
10	Expansion vessel connection
11	Pressure gauge
12	6-bar safety valve
13	Return pipe connection
14	Insulation

3-WAY DIVERTING VALVE (ZONE VALVE)

- Diverts fluid either in one direction or the other direction
- In the event of a power failure, it returns to its original position
- 1" connections



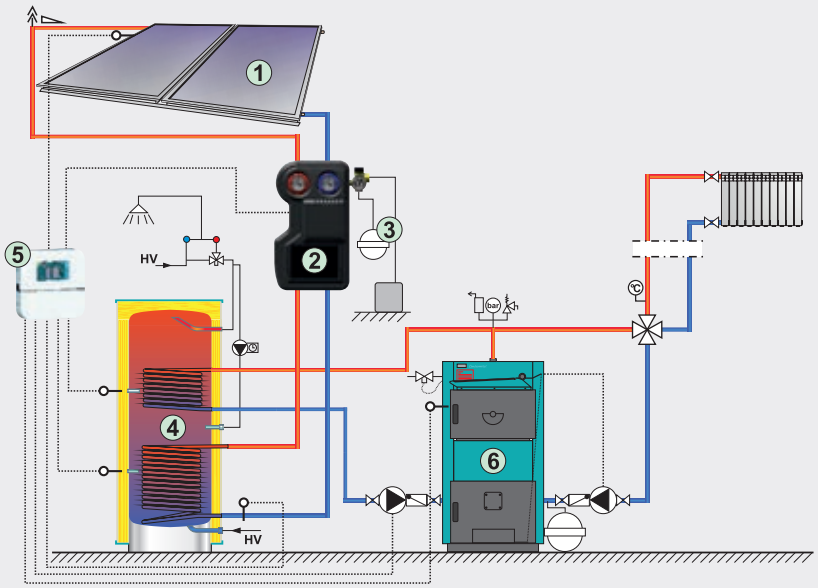

1	Solar thermal collectors
2	Solar pump group CSPG TL-6600
3	Solar expansion vessel
4	Bivalent domestic hot water tank
5	Solar controller
6	Heat source

CSPG TL-6600		
Pumpe	(type)	Grundfos Solar UPM3 15/75-130
Max. operating pressure	(bar)	6
Operating temperature	(°C)	130 °C - 150 °C max
Fluid	(-)	water with max. 50 % glycol
Joints	(-)	sealed, ϕf 22 mm
Connections	(mm)	R 3/4'', for hose ϕf15 mm
Width	(mm)	250
Height	(mm)	430
Depth	(mm)	170

Cm-SOL

Multifunction solar controller

The **Cm-SOL** solar controller is intended for controlling the heating of DHW tanks, buffer tanks (with or without built-in DHW tanks) or swimming pools via solar thermal collectors and/or boilers and/or electric heaters. **The controller can control the heating of up to 4 different tanks/pools that can be heated via up to 2 separate solar collector fields and up to 2 types of conventional sources (boilers) or electric heater.**

Collector pumps can be controlled with PWM or analog signal. In addition to the temperature sensor, a flow meter and a pressure switch can be connected to the controller. In addition to standard tank heating control via temperature difference, the controller has protection functions such as collector cooling (via tank), antifreeze collector options, tank cooling (via collector or recirculation), legionella protection (disinfection function) and outlet protection (pumps and valves) from blocking due to prolonged standstill.

All functions are controlled via the color touch screen, which simplifies the use of controller. As an accessory, the CM WiFi-box can be connected, which enables the connection of the controller to the local WiFi network and remote control and monitoring of the solar system.



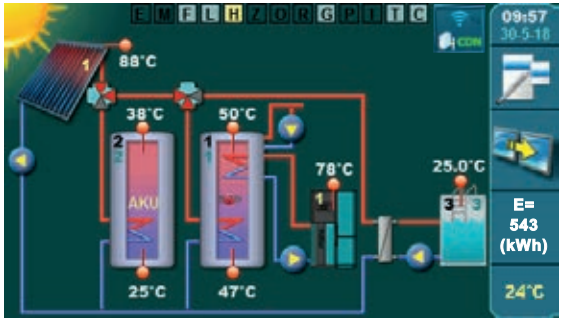

Characteristics of solar controller Cm-SOL

- The Cm-SOL controller can control solar heating of up to 4 separate tanks with 1 or 2 collector fields and heating of the first tank by means of conventional sources - electric heater and up to two boilers.
- The controller has 10 inputs, 8 outputs and 2 PWM and 2 analog outputs for collector pumps.
- Collector types can be chosen between flat plate and tube collectors.
- Tank types can be selected from DHW tank, buffer tank, buffer tank with built-in DHW tank and pool.
- The hydraulic connection of several tanks can be selected via pumps, zone 3-way valve and zone 2-way valve.
- It is possible to run the heating pump of the first tank to the second (heating of the DHW tank with buffer tank).
- Heating of the first tank can be done with an electric heater (via a contactor) and with up to 2 conventional heat sources.
- The controller can run the recirculation pump to pulse operation at a given timer settings.
- By entering the correct flow through the collectors and installing the collector return flow sensor, the controller calculates the total energy received from the collector. If a flow meter is installed, the energy calculation will be more accurate.

To monitor the operation of the solar system, it is possible to install a CM WiFi-box and monitor individual temperatures and the operation of individual pumps and valves via the web portal. It is also possible to change the set tank and collector temperatures via the web portal.

With CM WiFi-box (additional equipment) it is possible to control / monitor the solar system with a mobile phone / tablet / computer

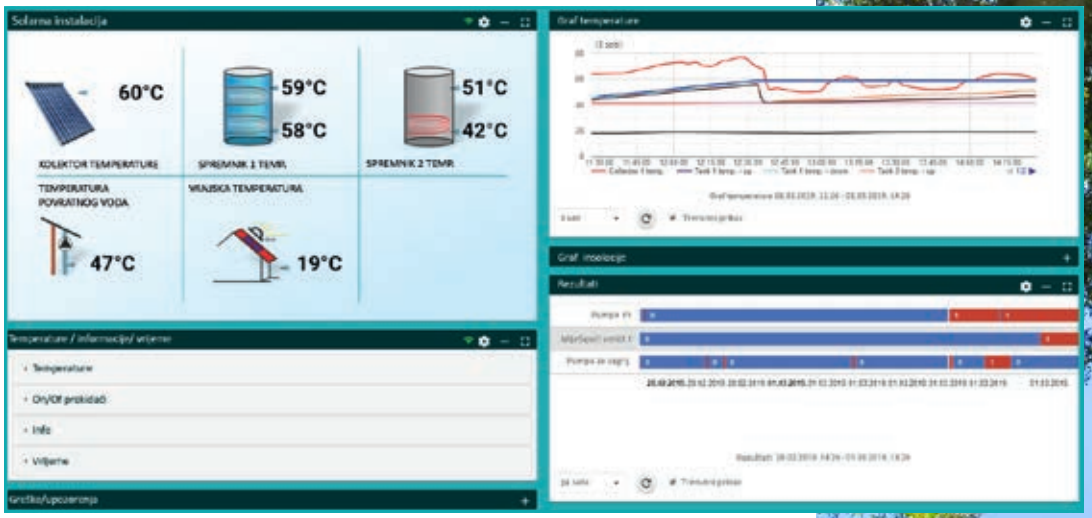



Monoblock and split heat pumps R32

Complete heating and cooling solution

A heat pump can be defined as a complete solution for space heating and cooling. It is an integrated system that is able to heat or cool the space and at the same time prepare domestic hot water (DHW).

It therefore offers a versatile solution for heat and cooling, usable all year round. It can replace any type of boiler or work in combination with it, in an integrated hybrid system. It is best to install heat pumps on low-temperature heating systems, but they can also be installed on radiator systems, up to 55 °C flow.



Controller
HPCU360iCMP



HEAT PUMP

Characteristics of monoblock and split heat pumps

- Air-to-water heat pumps.
- Monoblock models 5-30 kW and split models 5-16 kW.
- Ecological refrigerant R32.
- Low heating costs.
- Lew CO_2 emissions.
- Highly-efficiency heating and cooling sources.
- The touch screen controller controls the pump, up to two mixed heating/cooling circuits, one direct heating/cooling circuit and DHW heating (with recirculation).
- Can be connected to floor heating/cooling, fan coils and/or low-temperature radiator heating.
- Possible to connection to the web portal.



Auxiliary heater 2/4/6 kW
HPe2/4CM



Wired room thermostat
HPxTouchCM



Wireless room
thermostat HPx40CM



WiFi module
HPnet300CM



Two heating/cooling
HPx2kCM



Characteristics of R32 MONOBLOCK 5-30 kW

MONOBLOCK				5 kW	9 kW	16 kW	22 kW	30 kW
Power supply			(V/Ph/Hz)	230/1/50		400/3/50		
Capacity	Heating[2] A7/W35		(kW)	6,5	10	16	22	30
Rated input			(kW)	1,23	2,13	3,56	5	7,7
COP			(-)	5,30	4,70	4,50	4,40	3,91
Capacity	Heating[3] A7/W55		(kW)	6,3	9,4	16	22	30
Rated input			(kW)	2	3,03	5,61	8,3	13
COP			(-)	3,20	3,10	2,85	2,65	2,30
Capacity	Cooling[4] A35/W18		(kW)	6,5	10	15,4	23	31
Rated input			(kW)	1,28	2,33	3,67	5	7,8
EER			(-)	5,10	4,30	4,20	4,60	4,00
Capacity	Cooling[5] A35/W7		(kW)	5,50	9	14	21	29,5
Rated input			(kW)	1,69	3,10	4,83	7,11	11,5
EER			(-)	3,25	2,90	2,90	2,95	2,55
Seasonal energy efficiency class in heating mode[6]	W. Flow 35 °C			A+++	A+++	A++	A+++	A++
	W. Flow 35 °C			A++	A++	A++	A++	A+
SCOP[6]	W. Flow 35 °C			5,12	5,12	4,84	4,53	4,20
	W. Flow 35 °C			3,59	3,71	3,59	3,23	3,15
η_s	W. Flow 35 °C		(%)	202	202	191	178	165
	W. Flow 35 °C		(%)	141	145	141	126	123
SEER[6]	W. Flow 35 °C			5,09	5,08	5,14	4,7	5,67
	W. Flow 35 °C			7,81	8,31	7,54	4,49	5,71

MONOBLOCK				5 kW	9 kW	16 kW	22 kW	30 kW
Sound pressure level[7]			(dB(A))	60	65	72	73	77
Circul. pump	Supply height		(m)	9,0			12	
Expa. vessel	Volume		(lit.)	5,0				
Net dimensions (WxHxD)			(mm)	865x1040x410			1129x1558x440	
Net weight			(kg)	87		120	177	
Main/return flow (water)			(R)	1"		5/4"		
Safety valve ope. pres. (water)			(bar)	8				
Refrigerant	Type / GWP		(-)	R32 / 675				
	Charge		(kg)	1,25		1,8	5	
Auxiliary electric heater	Built in as standard		(kW)	-				
	Optional		(-)	HPe 2/4CM				
	Auxiliary heater power		(kW)	2/4				



1. EU standards: EN14511: 2016; EN14825: 2016; EN50564: 2011; EN12102: 2017; (EU) N° 811/2013; (EU) N° 813/2013; OJ 2014/C 207/02; OJ 2017/C 229/01.
2. Outdoor temperature 7 °C, 85 % RV.; water flow/return temperature 35/30 °C.
3. Outdoor temperature 7 °C, 85 % RV.; water flow/return temperature 55/47 °C.
4. Outdoor temperature 35 °C; water flow/return temperature 18/23 °C.
5. Outdoor temperature 35 °C; water flow/return temperature 7/12 °C.
6. Class of seasonal energy efficiency in heating regime for average climatic conditions.
7. Test standard: EN12102-1

Characteristics of R32 SPLIT 6-16 kW (with indoor unit)

SPLIT			6 kW	10 kW	16 kW
Power supply		(V/Ph/Hz)	220-240/1/50		380-415/3/50
Capacity	Heating[2] A7/W35	(kW)	6,20	10	16
Rated input		(kW)	1,24	2	3,56
COP		(-)	5	5	4.50
Capacity	Heating[3] A7/W55	(kW)	6	9,50	16
Rated input		(kW)	2	3,06	5,52
COP		(-)	3	3,10	2,90
Capacity	Cooling[4] A35/W18	(kW)	6,55	10	14,90
Rated input		(kW)	1,34	2,08	4,38
EER		(-)	4,90	4,80	3,40
Capacity	Cooling[5] A35/W7	(kW)	7,00	8,20	14
Rated input		(kW)	2,33	2,48	5,71
EER		(-)	3	3,30	2,45
Seasonal energy efficiency class in heating mode[6]	Water Flow 35 °C		A+++	A+++	A+++
	Water Flow 55 °C		A++	A++	A++
SCOP[6]	Water Flow 35 °C		4,95	5,20	4,62
	Water Flow 55 °C		3,52	3,47	3,41
η_s	Water Flow 35 °C	%	195	205	182
	Water Flow 55 °C	%	138	137	133
SEER[6]	Water Flow 7 °C		5,34	5,98	4,67
Sound pressure level[7]		(dB(A))	58	60	68
Net dimensions (WxHxD)		(mm)	1008x712x426	1118x865x523	
Net weight		(kg)	58	77	112
Refrigerant	Type	(-)	R32		
	Charge	(kg)	1,50	1,65	1,84
Pipe connections	Type	(-)	Crimped connection		
	Liquid phase	(mm)	Ø 6,35	Ø 9,52	Ø 9,52
	Gaseous phase	(mm)	Ø 15,9	Ø 15,9	Ø 15,9
	Minimum length	(m)	2		
	Maximum length	(m)	30		
Difference in installation height	Outdoor unit higher and lower	(m)	20		

INDOOR UNIT				6 kW	10 kW	16 kW
Compatible outdoor unit			(V/Ph/Hz)	220-240/1/50	220-240/1/50	220-240/1/50 380-415/3/50*
Sound pressure level			(dB(A))	43	43	45
Net dimensions (WxHxD)			(mm)	400x850x427	400x850x427	400x865x427
Net weight			(kg)	37	37	39
Water cycle	Pipe connections		(R)	1"		
	Safety valve		(bar)	3,0		
	Expansion vessel		(lit.)	8		
	Water heat exchanger	Type	(-)	Plate heat exchanger		
	Water heat exchanger		(m)	9		
Refrigerant circle	Liquid phase		(mm)	ø 6,35	ø 9,52	ø 9,52
	Gaseous phase		(mm)	ø 15,9	ø 15,9	ø 15,9
Auxiliary electric heater	Built in as standard (auxiliary el. heater)*		(kW)	3	3	9
	Optional		(-)	HPe 2/4CM		
	Auxiliary heater power		(kW)	2/4/6		
Room temperature range			(°C)	5 do 35		

* Units with factory-installed electric heater

Monoblock heat pumps R290

Ecological high-efficiency heating and cooling systems

High-temperature monoblock heat pumps with R290 working medium ensure reliable heating, cooling and DHW preparation throughout the year. Thanks to the excellent properties of propane, they can achieve water temperatures of up to 75 °C, and even at –20 °C they can provide a flow of up to 65 °C, making them ideal for radiator systems and buildings with high demands.

The devices come with a factory-installed 3 or 9 kW electric heater. With an additional module, remote control and operation monitoring via a web portal on a mobile device or computer are enabled.



Controller
HPCU360iCMP



Hest pump R290 (6-16 kW)



Heat pump R290 (26-40 kW)

HEAT PUMP

Characteristics of monoblock R290

- Air-to-water heat pumps.
- Monoblock models 6-16 kW and 26-40 kW.
- Ecological refrigerant R290 (propane).
- The 6 kW and 10 kW models are supplied with a built-in 3 kW electric heater, the 16 kW model comes with a built-in 9 kW heater, while the 26, 30, 35 and 40 kW models are not supplied with an electric heater, but are compatible with electric boilers for reheating.
- Less CO_2 emissions.
- Highly efficient heating and cooling sources.
- The control with a color touch screen controls the heat pump, up to two mixed heating/cooling circuits, one direct heating/cooling circuit and DHW heating (with recirculation).
- Can be connected to under floor heating/cooling, fan coils and/or low-temperature radiator heating.
- Possible to subsequently connect to a web portal.



Auxiliary heater 2/4/6 kW
HPe2/4CM



Wired room thermostat
HPxTouchCM



Wireless room
thermostat HPx40CM



WiFi modul
HPnet300CM



Two heating/cooling
circuit module HPx2kCM



Characteristics of R290 MONOBLOCK 6-16 kW

MONOBLOCK			6 kW	10 kW	16 kW
Power supply		(V/Ph/Hz)	220-240/1/50		380-415/3/50
Capacity	Heating[2] A7/W35	(kW)	6,2	10	15
Rated input		(kW)	1,27	2,13	3,41
COP		(-)	4,90	4,70	4,40
Capacity	Heating[3] A7/W45	(kW)	6,4	10	15
Rated input		(kW)	1,68	2,74	4,48
COP		(-)	3,80	3,65	3,35
Capacity	Heating[4] A7/W55	(kW)	6,2	9,50	15
Rated input		(kW)	2	3,12	5,26
EER		(-)	3,10	3,05	2,85
Capacity	Heating[5] A2/W35	(kW)	5,60	8,20	12,8
Rated input		(kW)	1,44	2,25	4
COP		(kW)	3,90	3,65	3,20
Capacity	Cooling[5] A35/W18	(kW)	6,5	10	16
Rated input		(kW)	1,28	2,11	2,05
EER		(kW)	5,10	4,75	3,90
Capacity	Cooling[5] A35/W7	(kW)	6,80	8,90	14
Rated input		(kW)	2,19	2,74	5,09
EER		(kW)	3,10	3,25	2,75
Seasonal energy efficiency class in heating mode[6]	Water flow 35 °C		A+++	A+++	A++
	Water flow 55 °C		A++	A++	A++

MONOBLOCK			6 kW	10 kW	16 kW
SCOP[6]	Water flow 35 °C		4,89	5,07	4,59
	Water flow 55 °C		3,82	3,82	3,57
η_s	Water flow 35 °C	(%)	192	199	180
	Water flow 55 °C	(%)	149	149	139
SEER[6]	Water flow 7 °C		5,32	5,55	5,12
	Water flow 18 °C		6,65	8,16	6,65
Sound pressure level[7]		(dB(A))	58	61	69
Circulation pump	Supply height	(m)	9,0		
Expansion tank	Volume	(lit.)	8,0		
Net dimensions (WxHxD)		(mm)	865x1040x410		
Net weight		(kg)	90	117	142
Main/return flow (water)		(R)	1"	5/4"	
Safety valve		(bar)	3,0		
Refrigerant	Type / GWP	(-)	R290 (3)		
	Charge	(kg)	0,7	1,1	1,25
Auxiliary electric heater	Built in as standard	(kW)	built in		
	Auxiliary heater power	(kW)	3/9		



1. EU standards: EN14511: 2016; EN14825: 2016; EN50564: 2011; EN12102: 2017; (EU) N° 811/2013; (EU) N° 813/2013; OJ 2014/C 207/02; OJ 2017/C 229/01.
2. Outdoor temperature 7 °C, 85 % RV.; water flow/return temperature 35/30 °C.
3. Outdoor temperature 7 °C, 85 % RV.; water flow/return temperature 55/47 °C.
4. Outdoor temperature 35 °C; water flow/return temperature 18/23 °C.
5. Outdoor temperature 35 °C; water flow / return temperature 7/12 °C.
6. Seasonal energy efficiency class in heating mode for average climate conditions.
7. Testing standard: EN12102-1

Characteristics of R290 MONOBLOCK 26-40 kW

MONOBLOCK			26 kW	30 kW	35 kW	40 kW
Power supply		(V/Ph/Hz)	380-415/3/50			
Capacity	Heating[2] A7/W35	(kW)	26	30	35	39
Rated input		(kW)	5,45	6,67	8,4	9,75
COP		(-)	4,77	4,50	4,17	4,0
Capacity	Heating[3] A7/W45	(kW)	26	30	35	39
Rated input		kW	6,82	8,26	10,05	11,9
COP		(-)	3,81	3,63	3,48	3,28
Capacity	Heating[4] A7/W55	(kW)	26	30	35	39
Rated input		(kW)	7,85	9,57	11,75	14,0
COP		(-)	3,31	3,13	2,98	2,79
Capacity	Heating[5] A7/W65	(kW)	26	30	35	39
Rated input		(kW)	9,86	11,85	14,60	16,66
COP		(-)	2,64	2,53	2,40	2,34
Capacity	Heating[6] A2/W35	(kW)	23,5	26,8	30,4	30,4
Potrebna el. snaga		(kW)	6,35	7,62	9,52	9,52
COP		(-)	3,70	3,52	3,19	3,19
Capacity	Cooling[7] A35/W18	(kW)	26	30	35	39
Rated input		(kW)	5,6	6,8	8,5	9,85
COP		(-)	4,64	4,41	4,12	3,96
Capacity	Cooling[8] A35/W7	(kW)	26	30	32	32
Rated input		(kW)	8,4	10,7	11,98	11,98
COP		(-)	3,10	2,80	2,67	2,67

MONOBLOCK			26 kW	30 kW	35 kW	40 kW
Seasonal energy efficiency class in heating mode[9]	Water flow 35 °C		A+++	A+++	A++	A++
	Water flow 55 °C		A+++	A++	A++	A++
SCOP[9]	Water flow 35 °C		4,95	4,92	4,48	3,84
	Water flow 55 °C		3,84	3,79	3,63	3,00
η_s	Water flow 35 °C	(%)	195	194	176	170
	Water flow od 55 °C	(%)	151	149	142	136
SEER[9]	Water flow od 7 °C		5,21	4,99	4,82	4,82
	Water flow 18 °C		7,17	6,80	6,43	6,22
Sound pressure level[7]		(dB(A))	69	74	75	76
Circulation pump	Supply height	(m)	12			
Expansion tank	Volume	(lit.)	5			
Net dimensions (WxHxD)		(mm)	1384x1816x523			
Net weight		(kg)	260			
Safety valve		(bar)	3,0			
Refrigerant	Type / GWP	(-)	R290 (3)			

1. EU standards: EN14511: 2016; EN14825: 2016; EN50564: 2011; EN12102: 2017; (EU) N° 811/2013; (EU) N° 813/2013; OJ 2014/C 207/02; OJ 2017/C 229/01.
2. Outdoor temperature 7 °C, 85 % RV.; water flow/return temperature 35/30 °C.
3. Outdoor temperature 7 °C, 85 % RV.; water flow/return temperature 45/37 °C.
4. Outdoor temperature 7 °C, 85 % RV.; water flow/return temperature 55/47 °C.
5. Outdoor temperature 7 °C, 85 % RV.; water flow/return temperature 65/57 °C.
6. Outdoor temperature 2 °C, 85 % RV.; water flow/return temperature 35/30 °C.
7. Outdoor temperature 35 °C; water flow/return temperature 18/23 °C.
8. Outdoor temperature 35 °C; water flow/return temperature 7/12 °C.
9. Seasonal energy efficiency class in heating mode for average climate conditions.

Tower-S/210 and Tower-M/210

Indoor unit of heat pumps

Tower-M/210 is designed for installation with Centrometal monoblock heat pumps with R32 or R290 working medium. The Tower-M/210 unit consists of a stainless steel DHW tank, an accumulation tank, a direct heating circuit pump, a Centrometal heat pump control and a DHW expansion vessel. In combination with a monoblock heat pump, this unit can replace any type of boiler or work in combination with it, in an integrated hybrid system.

Tower-S/210 is a comprehensive solution for heating, cooling and domestic hot water (DHW). The indoor split heat pump unit is an integrated 'all-in-one' system that is able to heat or cool the space and prepare domestic hot water. It can replace any type of boiler or work in combination with it, in an integrated hybrid system.

All components are located in a compact housing with floor plan dimensions of 600 x 600 mm, the same space as the washing machine it is usually installed next to in apartments, thus taking up minimal space.



Tower-S/210 and Tower-M/210

Characteristics of Tower-S/210 and Tower-M/210

- Compact dimensions.
- Expansion vessel 8 liters.
- Tower-S/210 has an electric heater 3/9 kW.
- Accumulation tank (30 liters).
- One direct heating circuit.
- One mixing heating circuit (additional option).
- Expansion vessel for DHW 11 liters.
- Safety valve.
- Electric heater 2 kW (additional option for DHW).
- 3-way diverter (zone) valve.

Tower-S/210

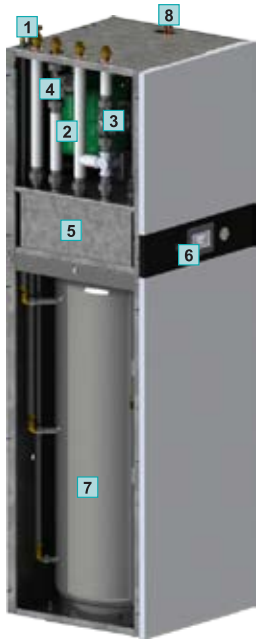

1	Connections
2	Expansion tank for DHW
3	1 mixing heating/cooling circuit with pump and mixing valve (optional)
4	1 direct heating circuit/cooling circuit with pump
5	Bulk tank (30 lit.)
6	Touch-sensitive color control/room thermostat
7	DHW tank (210 lit.)
8	Indoor heat pump unit with 3/9 kW electric heater

Tower-M/210



1	Connections
2	Expansion vessel for DHW
3	1 mixing heating/cooling circuit with pump and mixing valve (optional)
4	1 direct heating circuit/cooling circuit with pump
5	Bulk tank (30 liters)
6	Colored touch control/room thermostat
7	DHW tank (210 liters)

Controller



Tower-S/210

TOWER-S/210			6 kW	10 kW	16 kW
Compatible outdoor unit[1]		(-)	SHPA06RP24CM	SHPA010RP24CM	SHPA016RP24P3CM
Power supply		(V/Ph/Hz)	220-240/1/50	220-240/1/50	380-415/3/50
Sound power level		(dB(A))	38	42	43
Dimensions (WxHxD)		(mm)	600x2000x600		
Net/gross weight		(kg)	265		
Water cycle	Pipe connections	(R)	1"		
	Safety valve	(bar)	3,0		
	Volume of water in the unit	(lit.)	30		
	Outlet	(mm)	Ø 25		
	Expansion vessel	(lit.)	8,0		
	Water heat exchanger	(-)	Plate exchanger		
DHW	DHW tank volume	(lit.)	210		
	DHW expansion vessel	(lit.)	11		
	Connections	(R)	3/4"		
	Safety valve	(bar)	6		
	Electric heater option	(kW)	2		
Working medium circle	Droplet phase	(mm)	Ø 6,35	Ø 9,52	Ø 9,52
	Gas phase	(mm)	Ø 15,9		
Auxiliary electric heater	Standardly installed	(kW)	3	3	9
	Modulation steps	(-)	1		
Water inlet temperature range	Cooling	(°C)	5 do 25		
	Cooling/heating DHW	(°C)	25 do 65		
	Connections	(°C)	30 do 60		
Room temperature range		(°C)	5 do 35		

1. Applicable EU standards and legislation: EN14511; EN14825; EN50564; EN12102; (EU) No 811:2013; (EU) No 813:2013; OJ 2014/C 207/02:2014

Tower-M/210

TOWER-M/210			
Power supply		(V/Ph/Hz)	220-240/1/50
Sound power level		(dB(A))	37
Dimensions (WxHxD)		(mm)	600x1935x600
Net/gross weight		(kg)	185
Water cycle	Pipe connections	(R)	1"
	Safety valve	(bar)	3,0
	Volume of water in the unit	(lit.)	30
	Outlet	(mm)	Ø 25
DHW	DHW tank volume	(lit.)	210
	DHW expansion vessel	(lit.)	11
	Connections	(R)	3/4"
	Safety valve	(bar)	6
	Electric heater option	(kW)	2



WATER PRESSURE TANKS (HYDROPHORES VESSELS)

Accumulation of fresh drinking water

Water pressure tanks **CH** (Hydrophore vessels) with a volume of **90 to 300 liters** are intended for the accumulation of fresh drinking water in households, catering and other facilities where it is necessary to have a larger amount of water at a certain pressure. They are often used for water accumulation in various technological processes in industry.
They are made of stainless steel using modern technologies, which guarantees high hygienic conditions and reliability in operation and long service life.



Characteristics of CH hydrophore vessels:

- Hydrophore vessel volumes: 90, 140, 180, 260 and 300 liters.
- Material: stainless steel.
- Max. operating overpressure: 5 bar.
- Prepared fittings with internal thread for all necessary equipment.
- They are made in accordance with the ISO 9001 standard.
- They have all the necessary certificates.

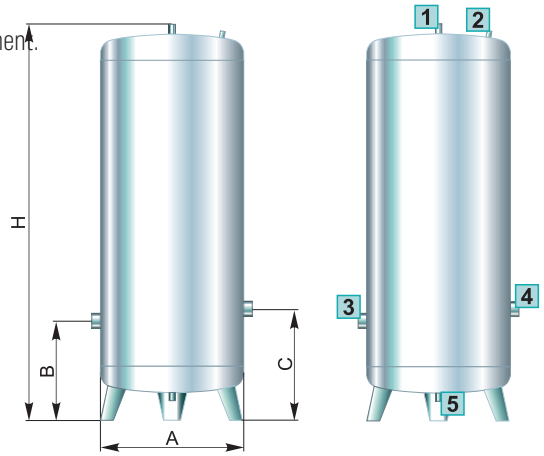

1	Connection - pressure switch
2	Connection - manometer
3	Connection - water inlet
4	Connection - water outlet
5	Drain

CH		90	140	180	260	300
Volume	(lit.)	90	140	180	260	300
Vessel height H	(mm)	689	977	1197	1627	1877
Vessel diameter A	Ø (mm)	480	480	480	480	480
Water inlet height B	(mm)	285	285	285	285	285
Water outlet height C	(mm)	375	375	375	375	375
Pressure switch connection	(R)	1/2"	1/2"	1/2"	1/2"	1/2"
Manometer connection	(R)	1/4"	1/4"	1/4"	1/4"	1/4"
Water inlet/outlet connection	(R)	5/4"	5/4"	5/4"	5/4"	5/4"
Drain connection	(R)	1"	1"	1"	1"	1"
Vessel mass	(kg)	15	19	22	28	32
Maximum working pressure	(bar)	5	5	5	5	5



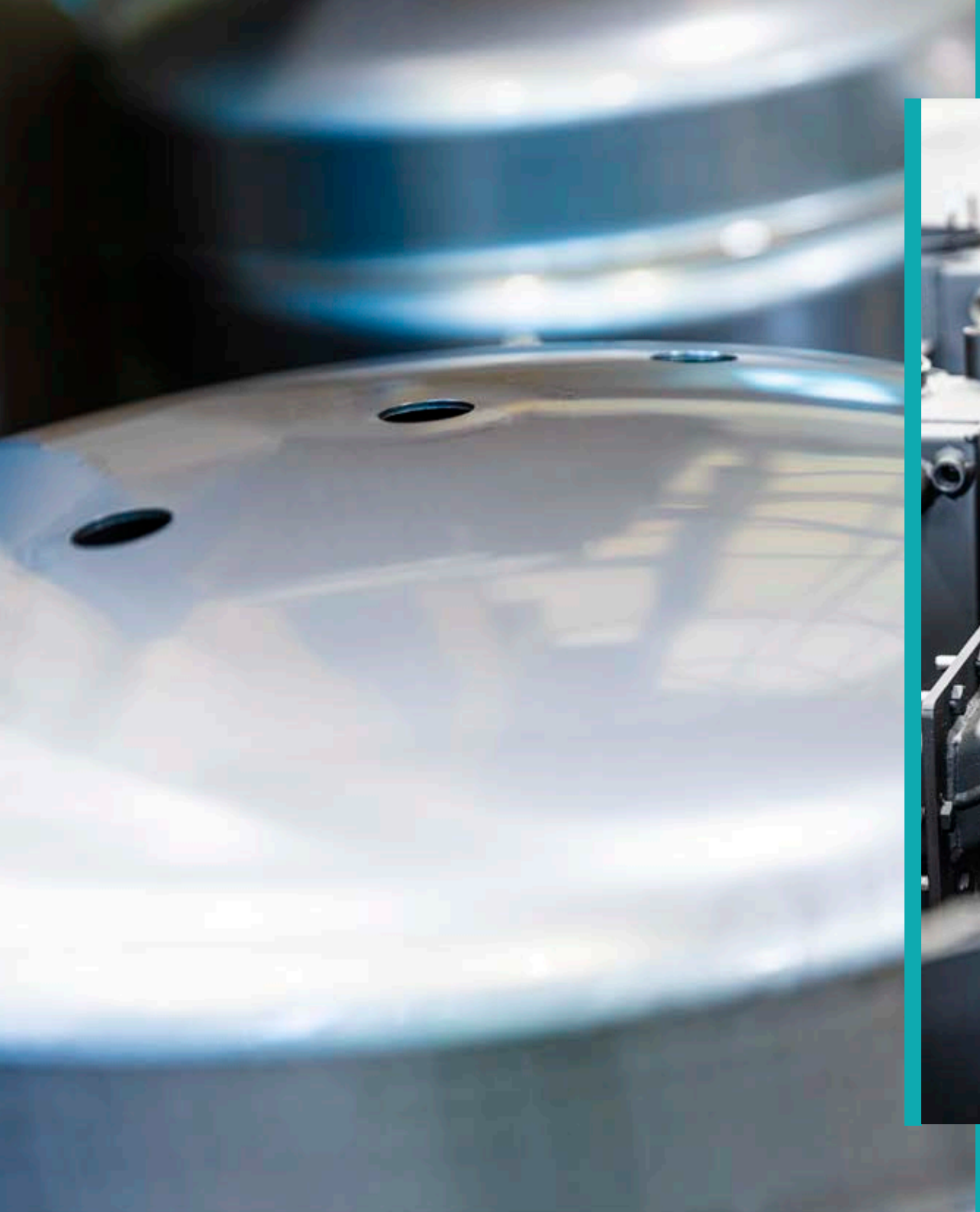







Centrometal d.o.o. is a family company that has grown up in a region with hard working people, surrounded by beautiful nature and with all its precious fruits. One of the fruits is certainly a good wine. The Zidarić family is extraordinarily proud of their own vineyard and vine cellars, which, without any doubt, are central to their spare time activities.

A high appreciation of sporting spirit and of a healthy life-style is expressed by the Zidarić family's sponsorship of sport teams and other outgoing activities. This is a demonstration that development of the company brings with it the development of the quality of life and the environment.



VC M. "Centrometal" Macinec - Super League



FC "Centrometal" Macinec - Međimurje Premier League

Countries we export to

Albania
Algeria
Austria
Belgium
Bosnia and Herzegovina
Bulgaria
Czech Republic
Denmark
England
Finland
France
Germany
Greece
Hungary
Ireland
Italy
Japan
Kosovo
Latvia
Liechtenstein
Luxembourg
Montenegro
Morocco
Netherlands
North Macedonia
Norway
Poland
Portugal
Romania
Serbia
Slovakia
Slovenia
Spain
Sweden
Switzerland
Ukraine



Centrometal d.o.o. shall not be responsible for possible incorrect data caused by error made in transcription and all figures and diagrams are for explanatory purposes only and relevant adjustment have to be made at the spot. In any case, it reserves the right to modify its products as deemed to be required and useful without any prior notification.

Centrometal
HEATING TECHNIQUE

Centrometal d.o.o.

Glavna 12 | 40306 Macinec | Croatia

e-mail: **komercijala@centrometal.hr**

headquarters: **+385 (0)40 372 600**

wholesale: **+385 (0)40 372 640**

commercial: **+385 (0)40 372 610**

Export Office Zagreb: **+385 (0)91 2338 784**

www.centrometal.hr/en

PC10/2026